
STRUCTURAL ENGINEERS ASSOCIATION OF UTAH
10th Annual SEAU Education Conference
Ductility: Another View
Duane K. Miller, P.E., Sc.D
The Lincoln Electric Company

1


NASCC:
THE STEEL CONFERENCE
Important Lessons I've Learned
During the Past 40 Years

2



3

PURDUE UNIVERSITY LYLES SCHOOL OF CIVIL ENGINEERING

Ductility: Another View

Dennis & Leslie Drag Distinguished Lecture Series



Duane K. Miller, P.E, ScD., The Lincoln Electric Company

4

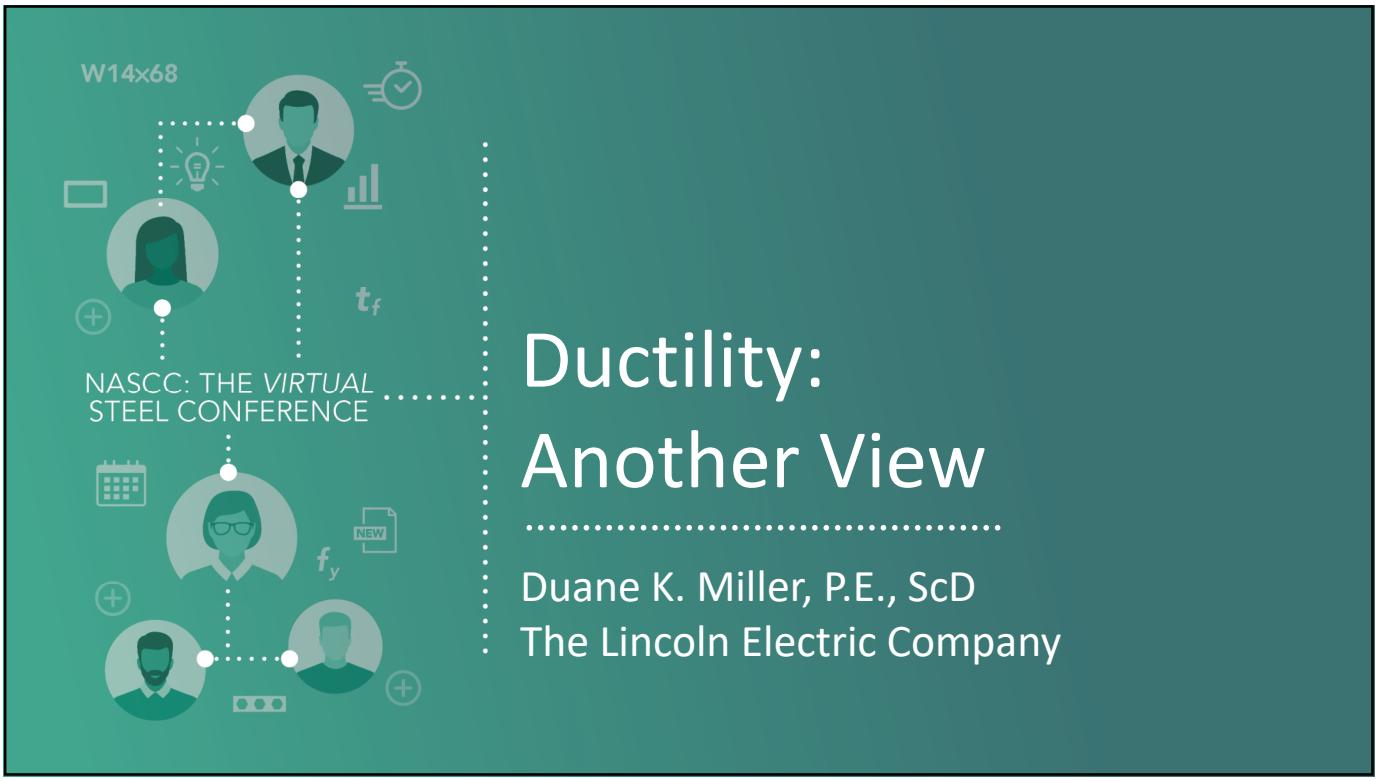

Ductility: Another View

Duane K. Miller, P.E., ScD
The Lincoln Electric Company

5

Ductility: Another View

Outline

- Introduction
- A Wrong View
- A Corrected View
- The View of Physics
- Application of the Correct View

6

- Ductility: used 69 times
- Ductile: used 10 times
- Neither term defined in the glossary

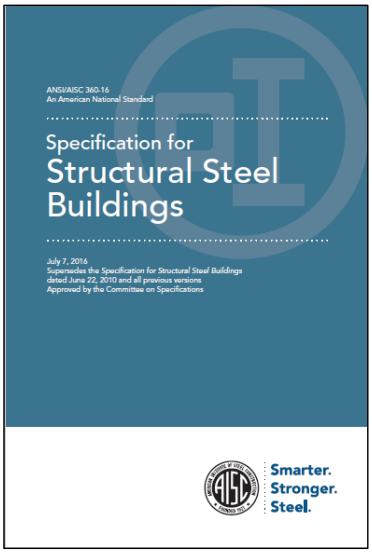

7

- Ductility: used 87 times
- Ductile: used 193 times
- Ductilities: used 2 times
- None of these terms are defined in the glossary



8

- Inelastic: used 374 times
- Not defined in the glossary



9

- Steel: used 2740 times
- Concrete: used 470 times
- Ratio: 5.8:1
- Why? **Steel >> Concrete**

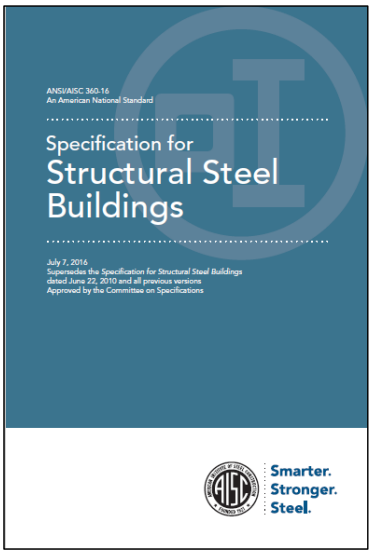

10

- Welding: used 236 times
- Bolting: used 41 times
- Ratio: 5.8:1
- Why? **Welding >> Bolting**

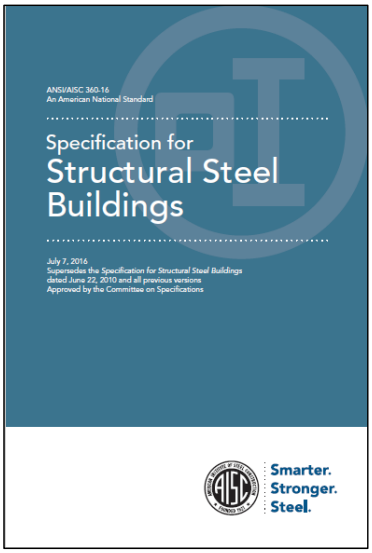

11

GLOSSARY

Percent elongation

Measure of **ductility**, determined in a tensile test as the maximum elongation of the gage length divided by the original gage length expressed as a percentage.

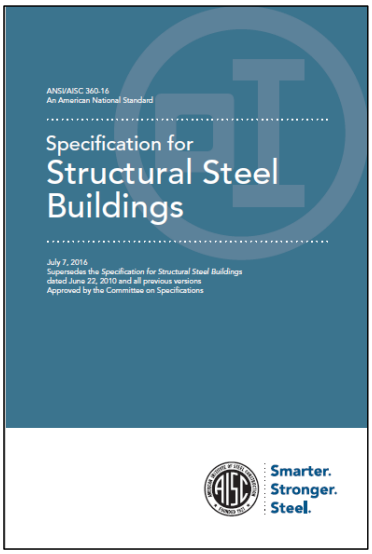

12

COMMENTARY GLOSSARY

Brittle fracture.

Abrupt cleavage with little or no prior **ductile** deformation.

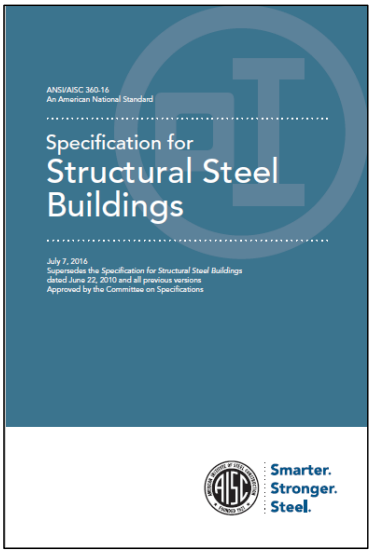

13

GLOSSARY



Ductile limit state

Ductile limit states include member and connection yielding, bearing deformation at bolt holes, as well as buckling of members that conform to the seismic compactness limitations of Table D1.1. Rupture of a member or of a connection, or buckling of a connection element, is not a **ductile** limit state.

14

Elements of Material Science and Engineering: Van Vlack

Ductility—Permanent deformation before fracture; measured as elongation or reduction in areas.

15

Mechanical Behavior of Materials: Dowling

The engineering fracture strain is one measure of ductility.

Another measure of ductility is the percent reduction in area, called %RA….

16

Mechanical Metallurgy: Dieter

Fractures can be classified into two general categories, ductile and brittle. A ductile fracture is characterized by appreciable plastic deformation prior to and during the propagation of the crack. An appreciable amount of gross deformation is usually present at the fracture surfaces.

17

Ductility: Another View

Outline

- Introduction

Ductility: Might have different meanings

18

Ductility: Another View

Outline

- Introduction
- A Wrong View
- A Corrected View
- The View of Physics
- Application of the Correct View

19



20

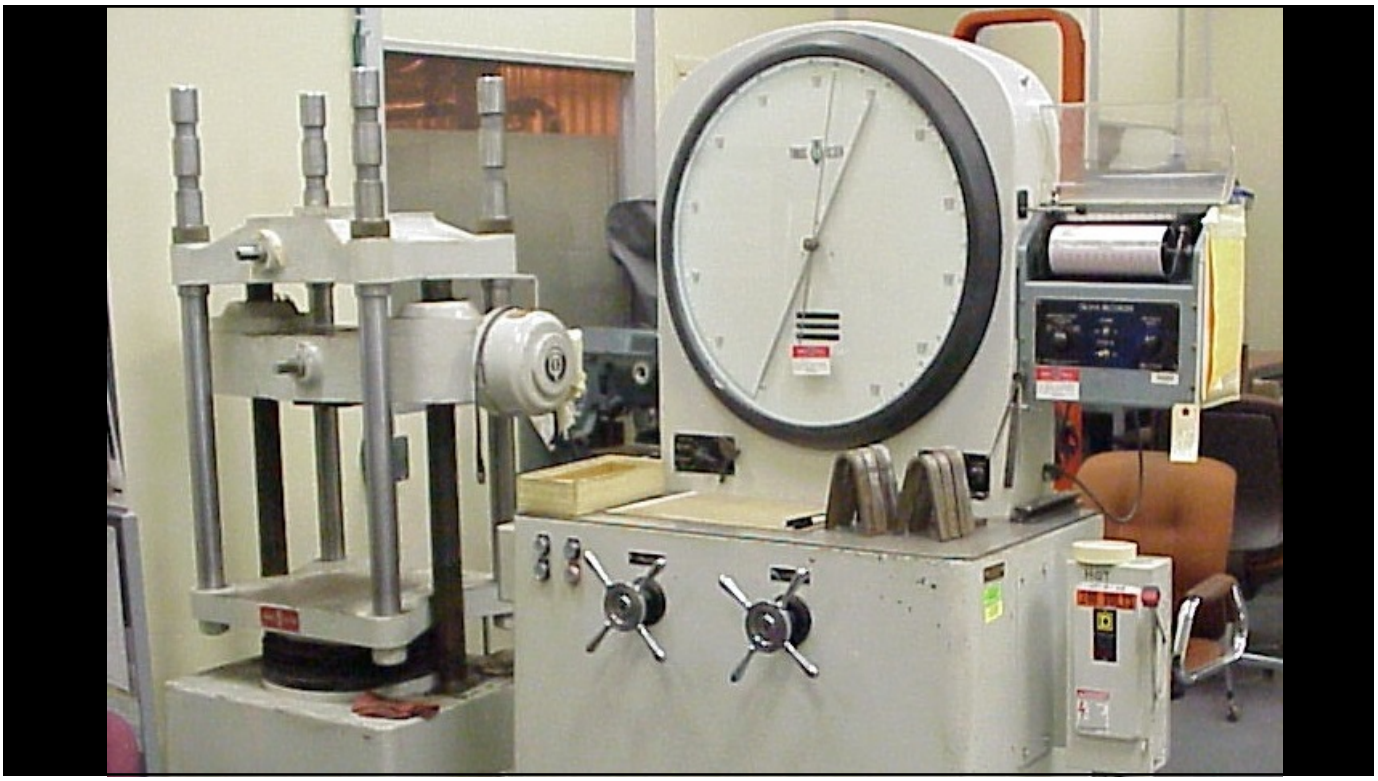

21



22

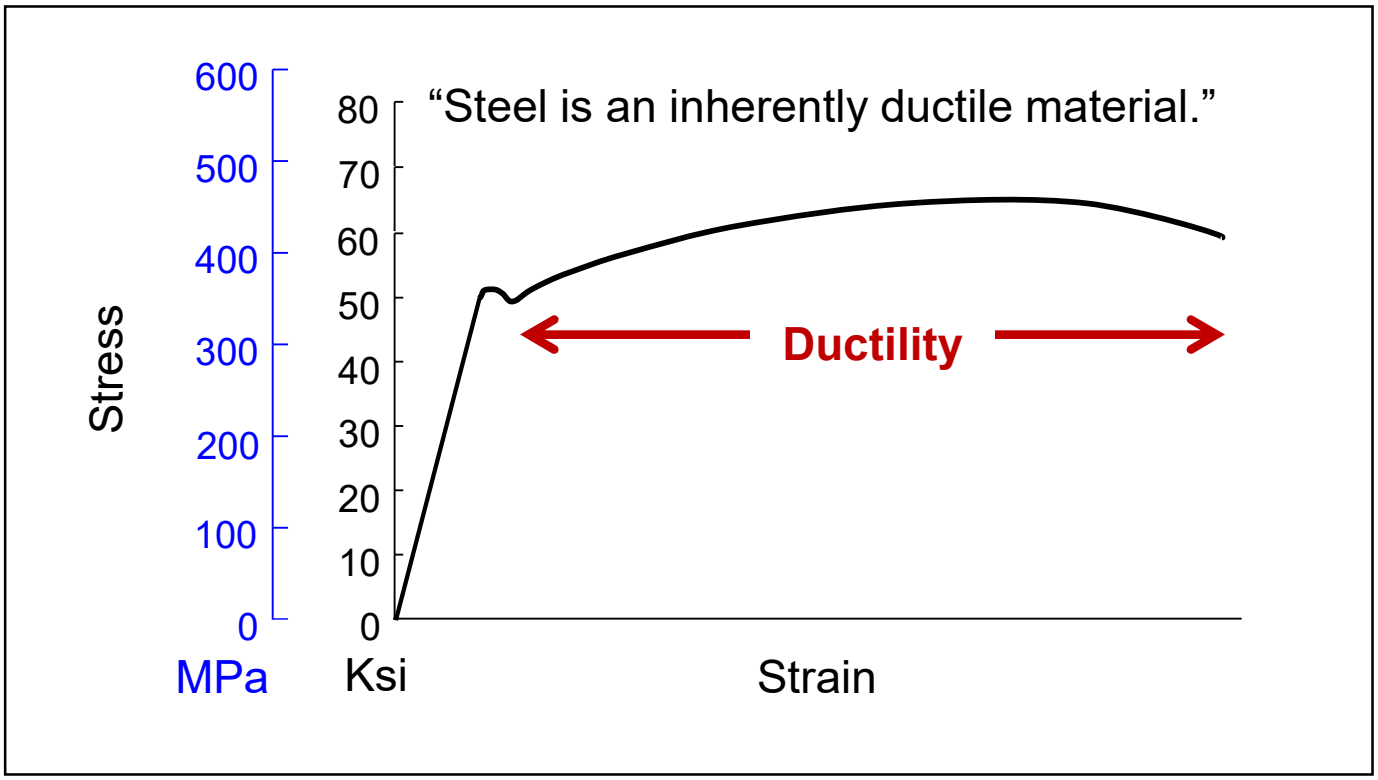
"Steel is an inherently ductile material."
Stress
600
500
400
300
200
100
0
MPa
80
70
60
50
40
30
20
10
0
Ksi
Ductility
Strain

23

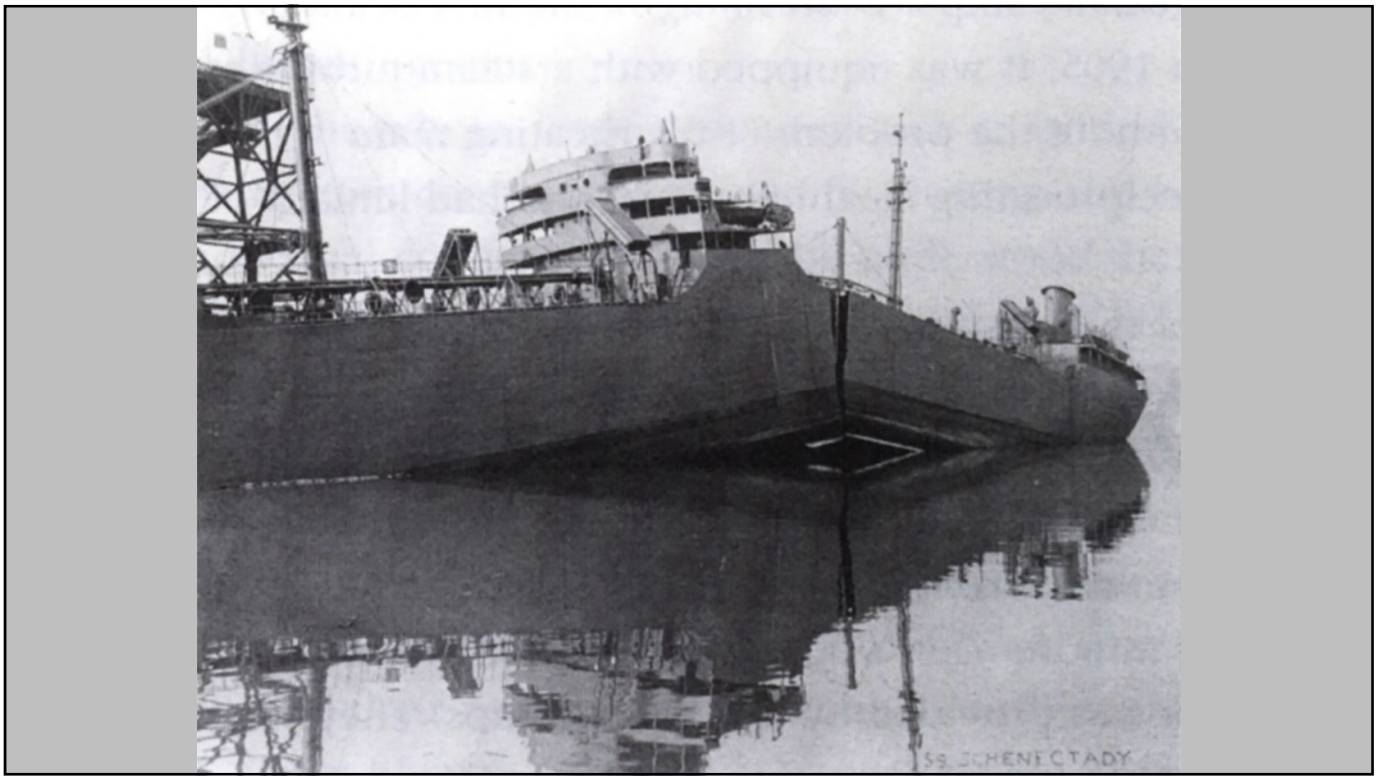

24

Ductility: Another View

Outline

- Introduction
- A Wrong View

Ductility is a material property, ductile material always leads to ductile performance.

25

Ductility: Another View

Outline

- Introduction
- A Wrong View
- A Corrected View
- The View of Physics
- Application of the Correct View

26

Omer W. Blodgett
1917-2017

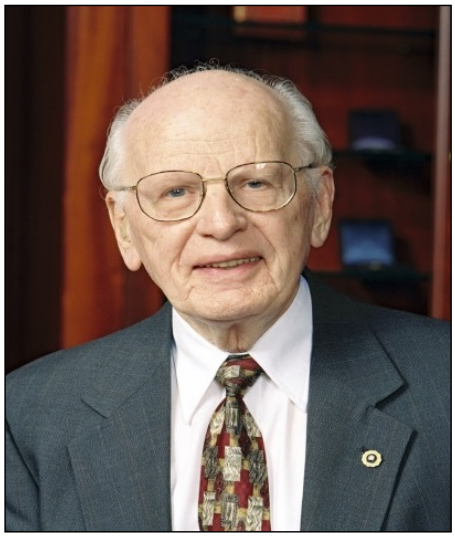

27

Globe Shipbuilding, Duluth Minnesota



28

One of ten V4-M-AV1 ocean-going tugs.



29

One of eight S2-S2-AQ1 Frigates

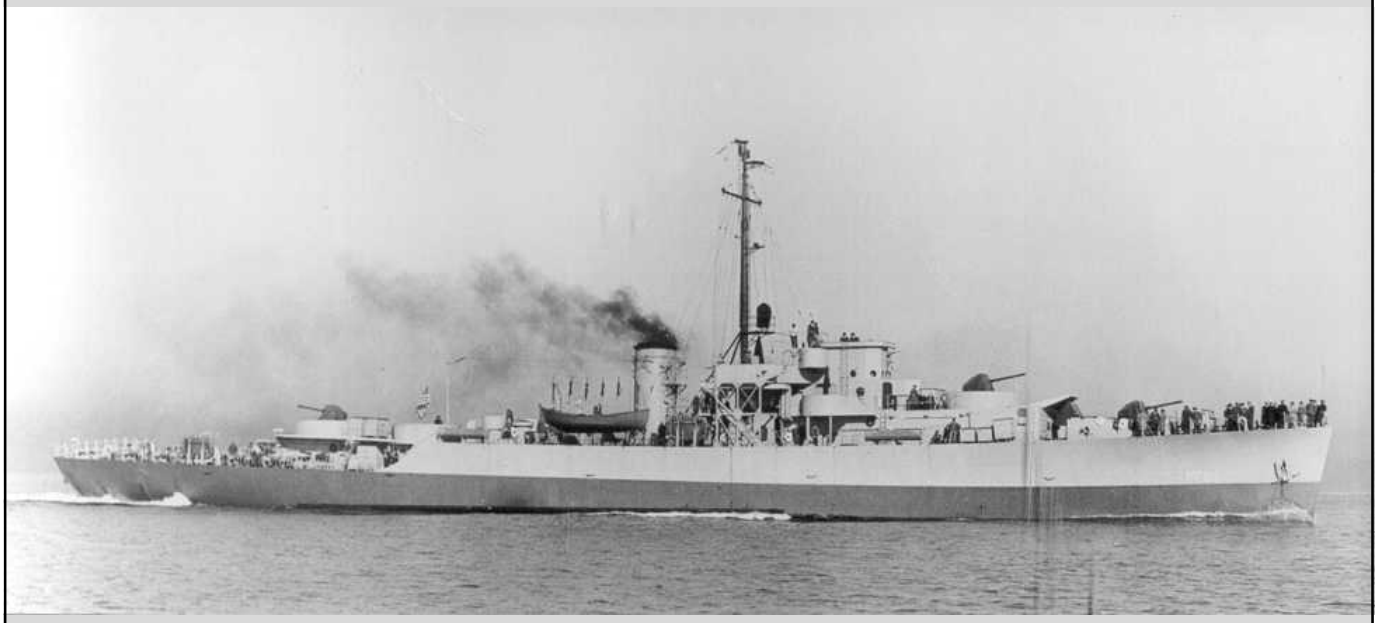

30

One of eleven C1-M-AV1 Cargo Vessels



31

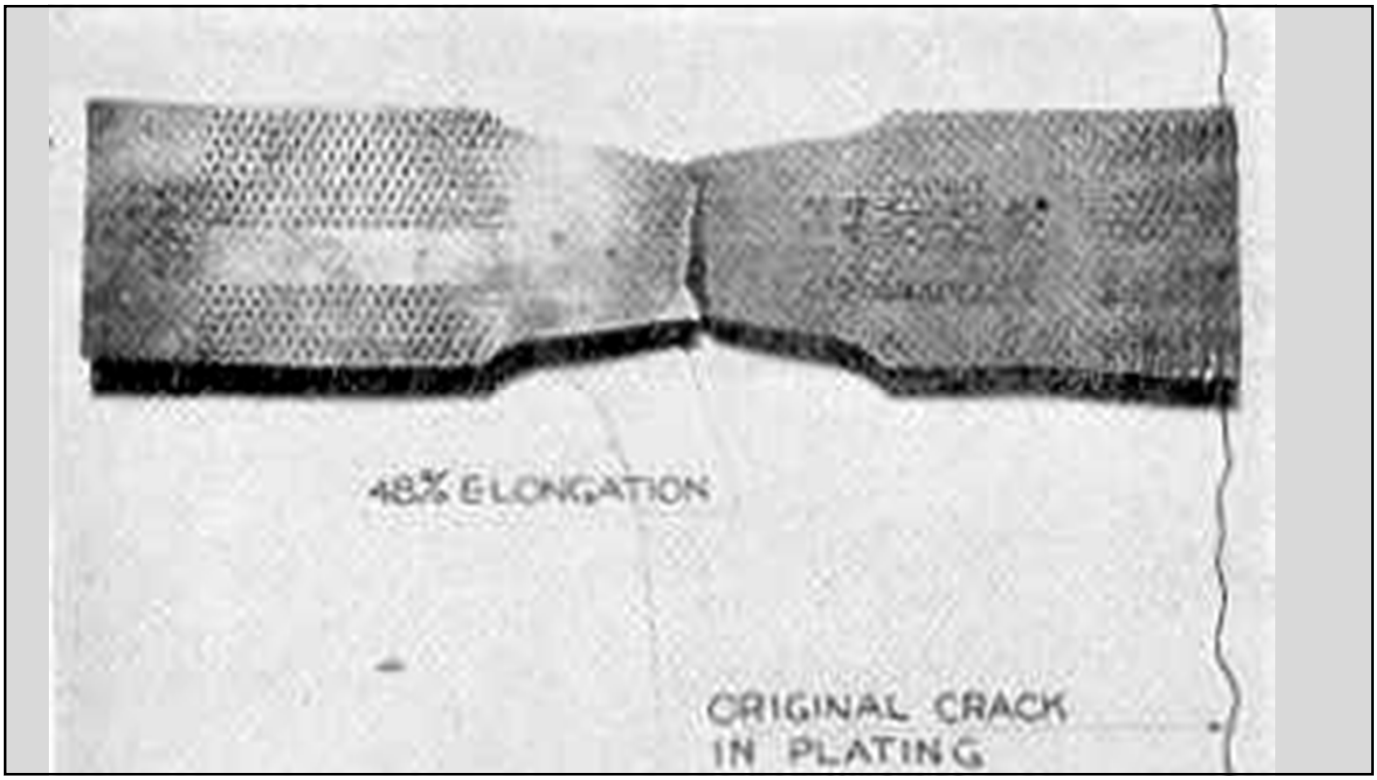

32

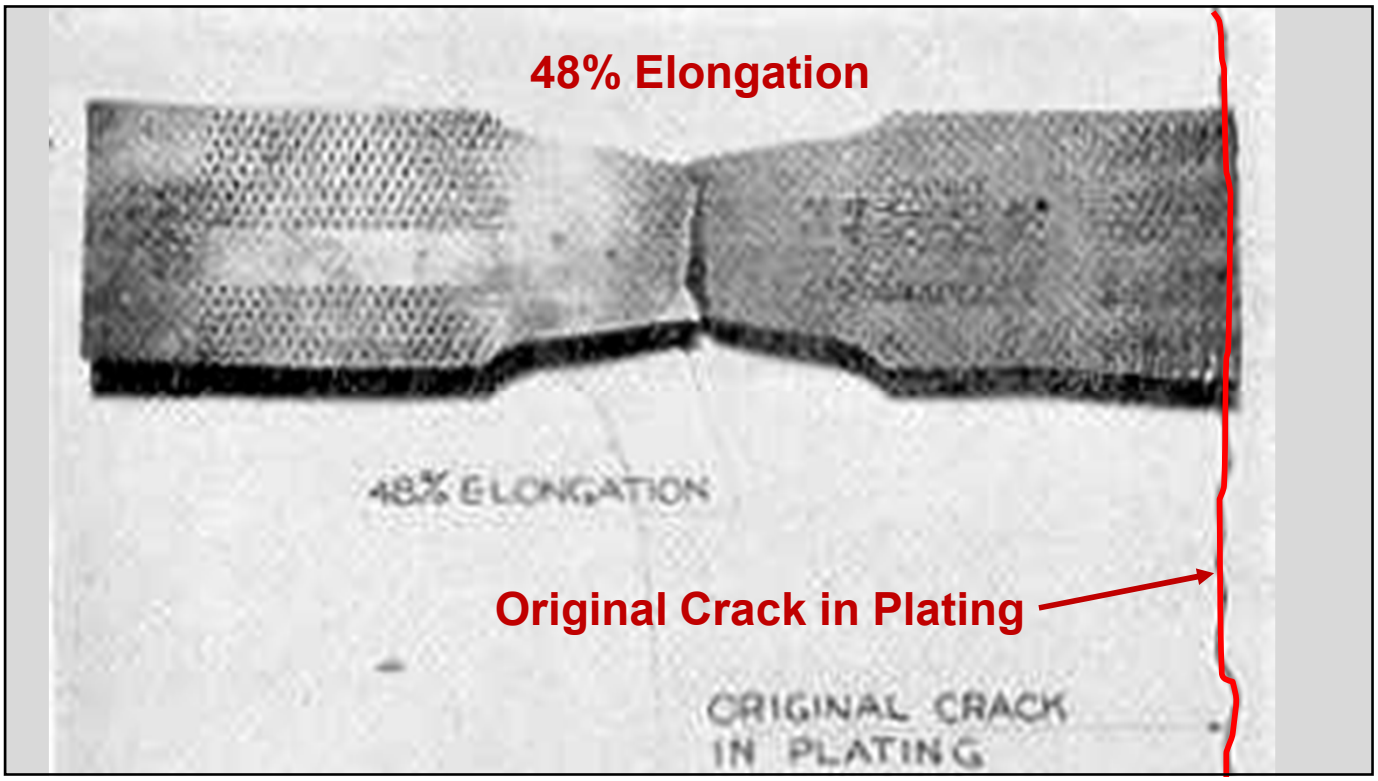

33

Strength of Metals Under

Combined Stresses

Maxwell Gensamer
1941

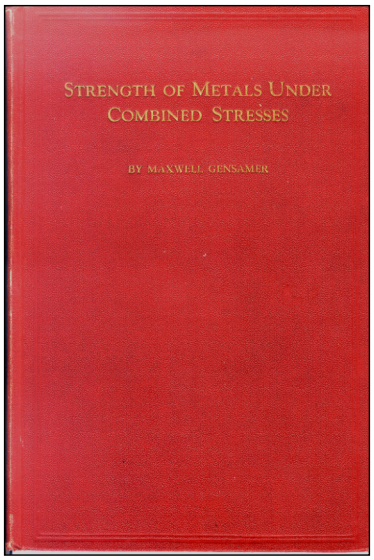

34

"This is an important concept and needs to be emphasized: no shear stress, no plastic deformation or flow."

Maxwell Gensamer

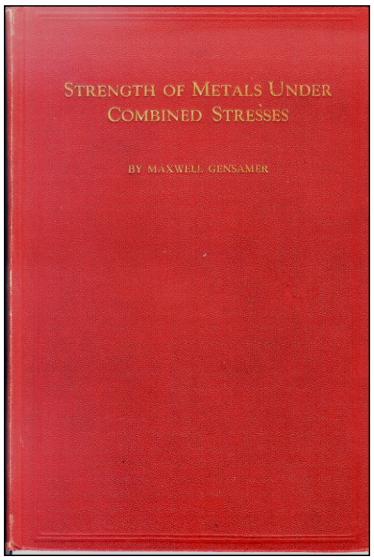

35

Christian Otto Mohr
1835 – 1918

Mohr's Circles

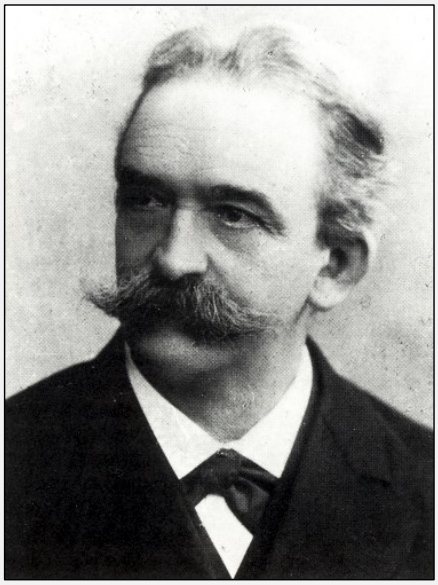

36

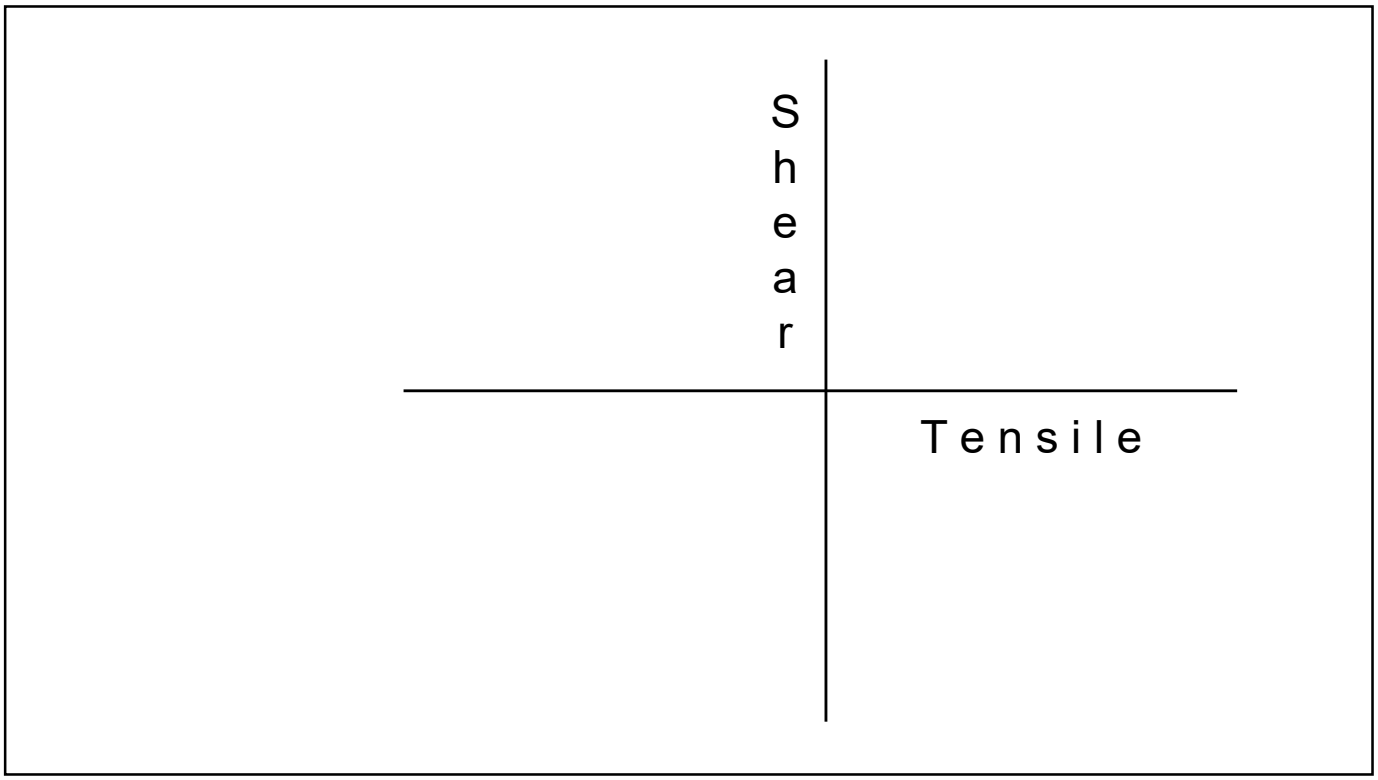

37

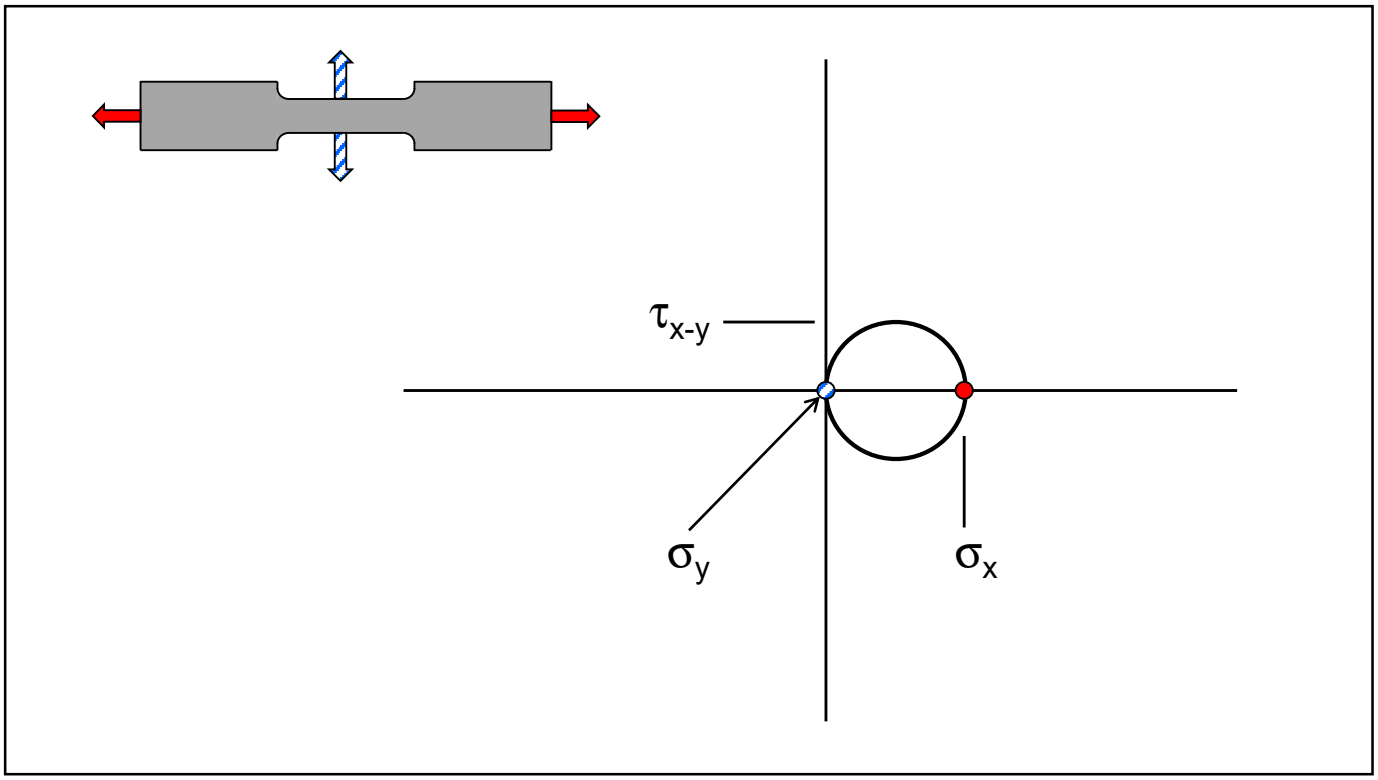

38

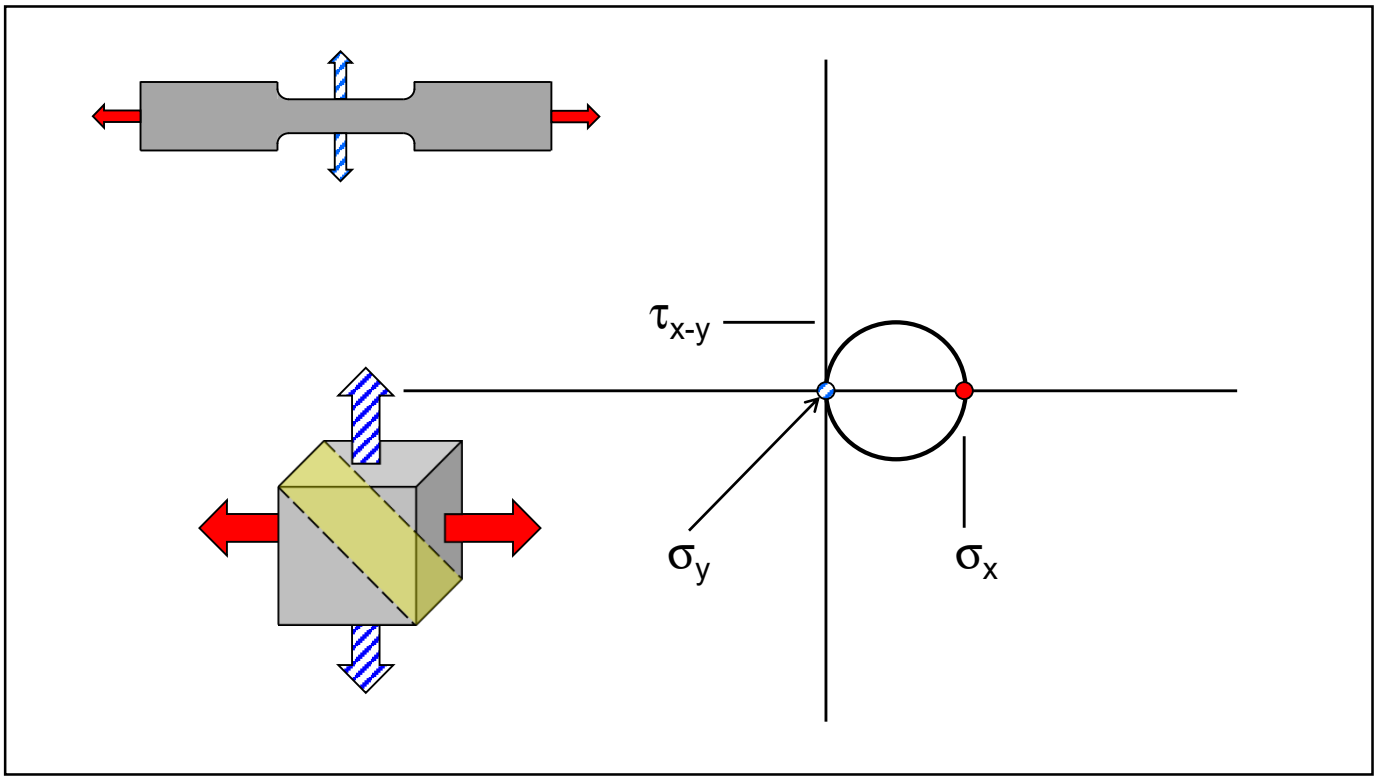

39

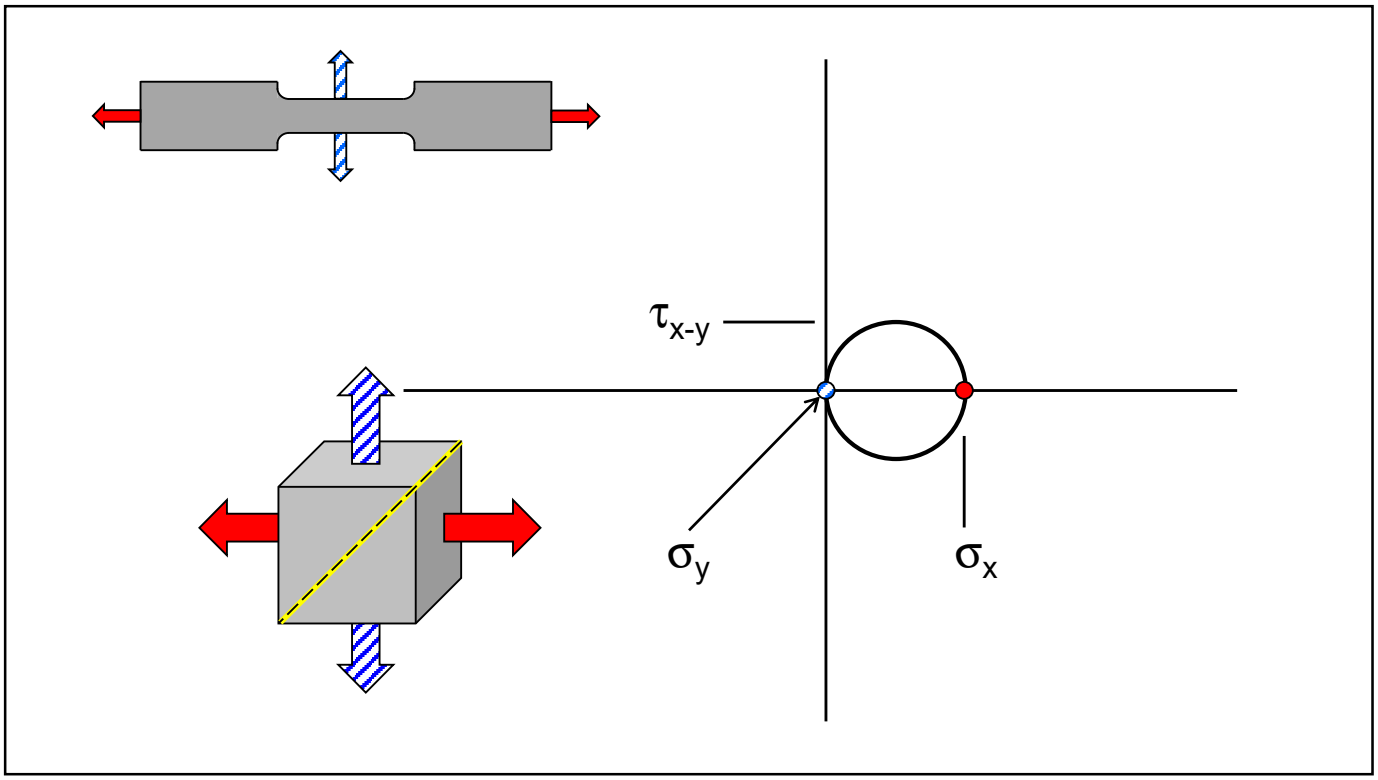

40

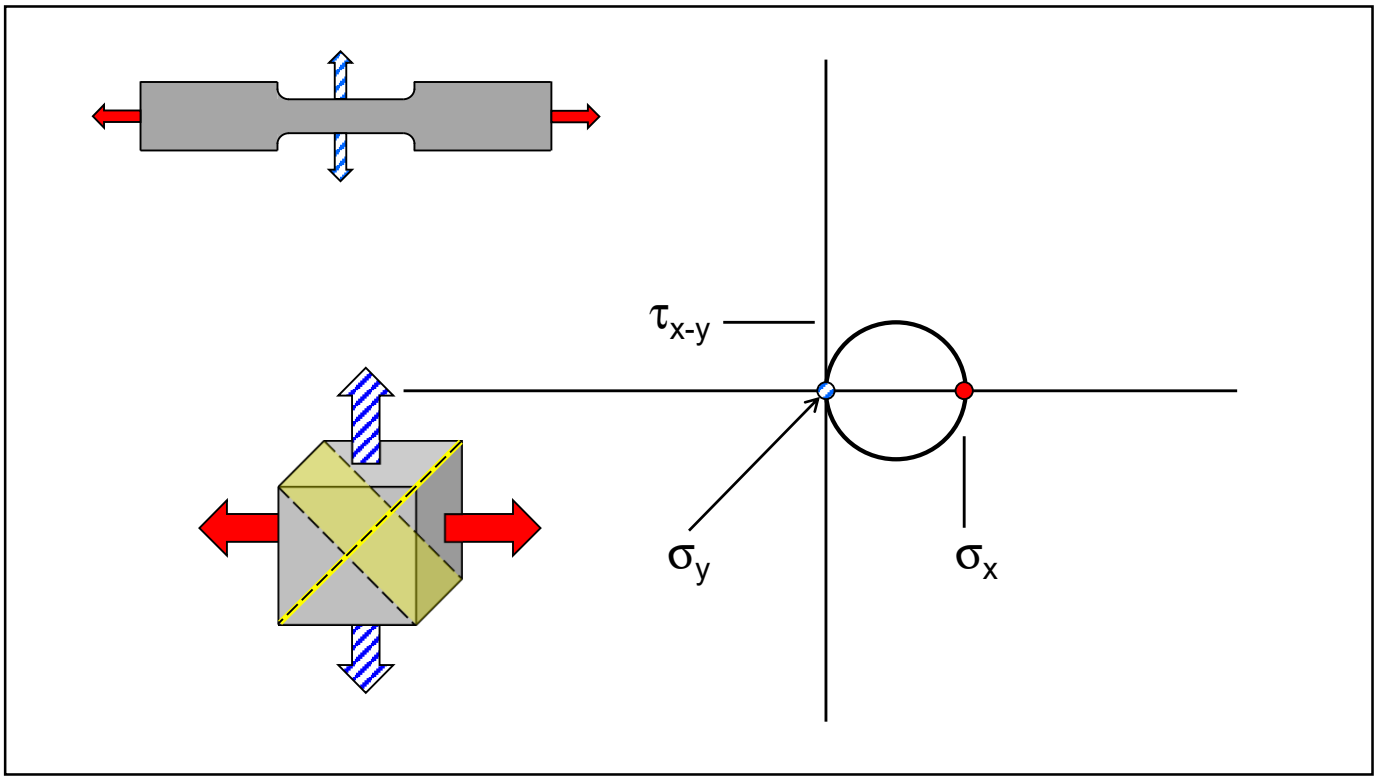

41

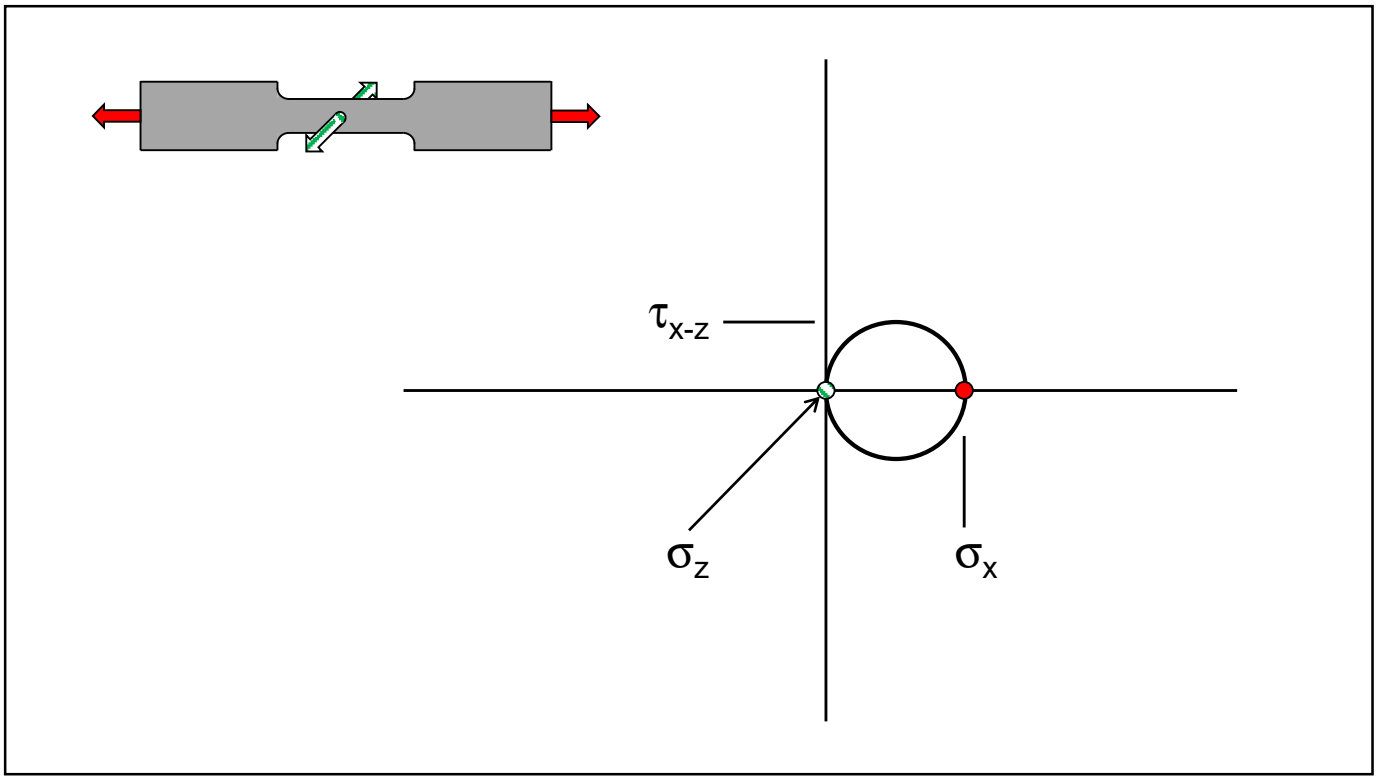

42

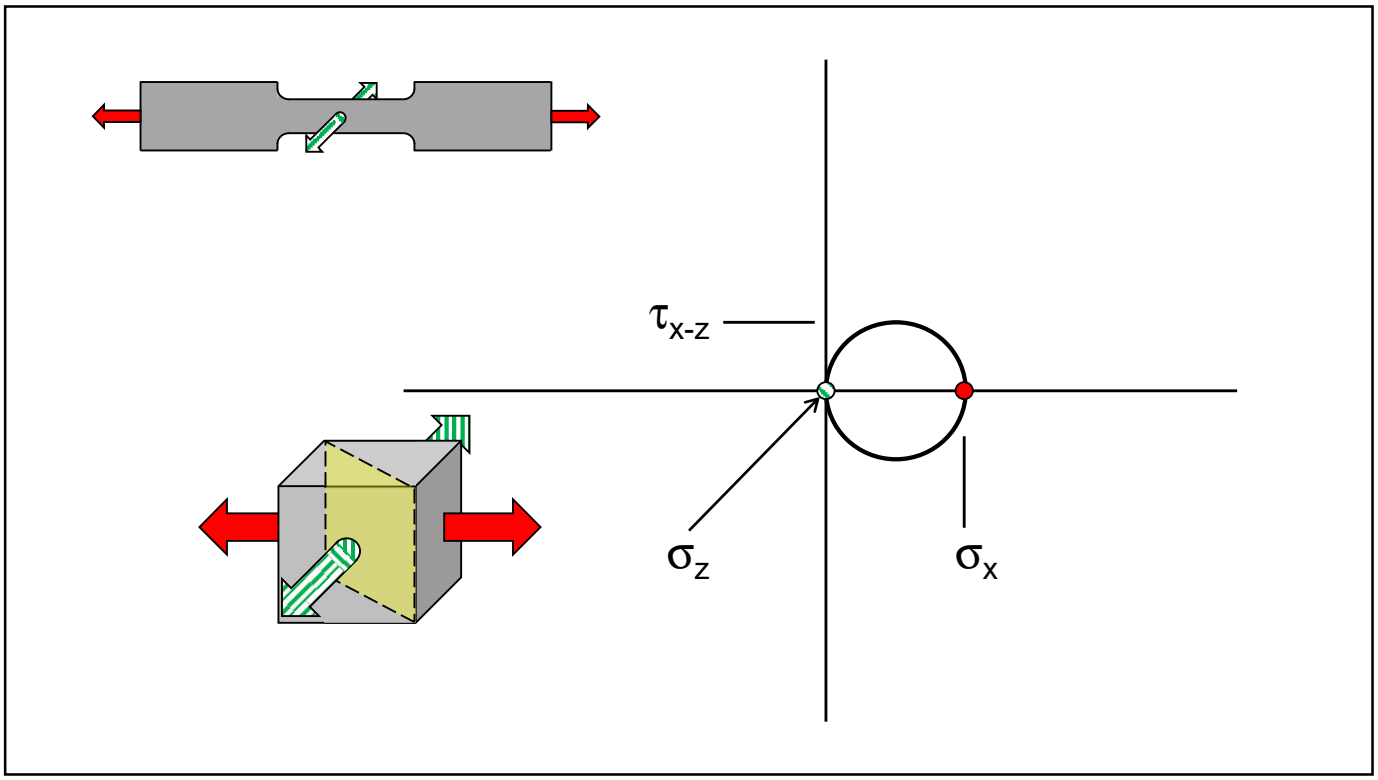

43

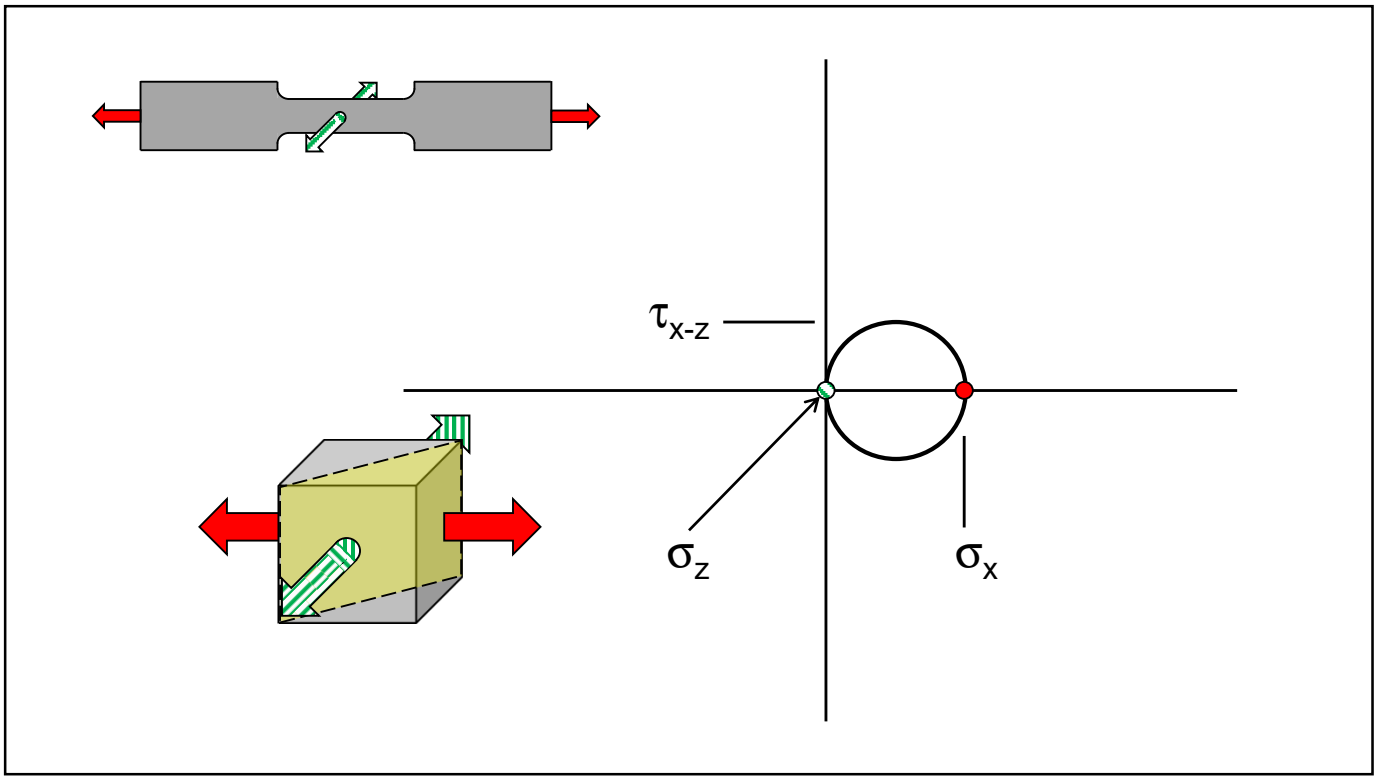

44

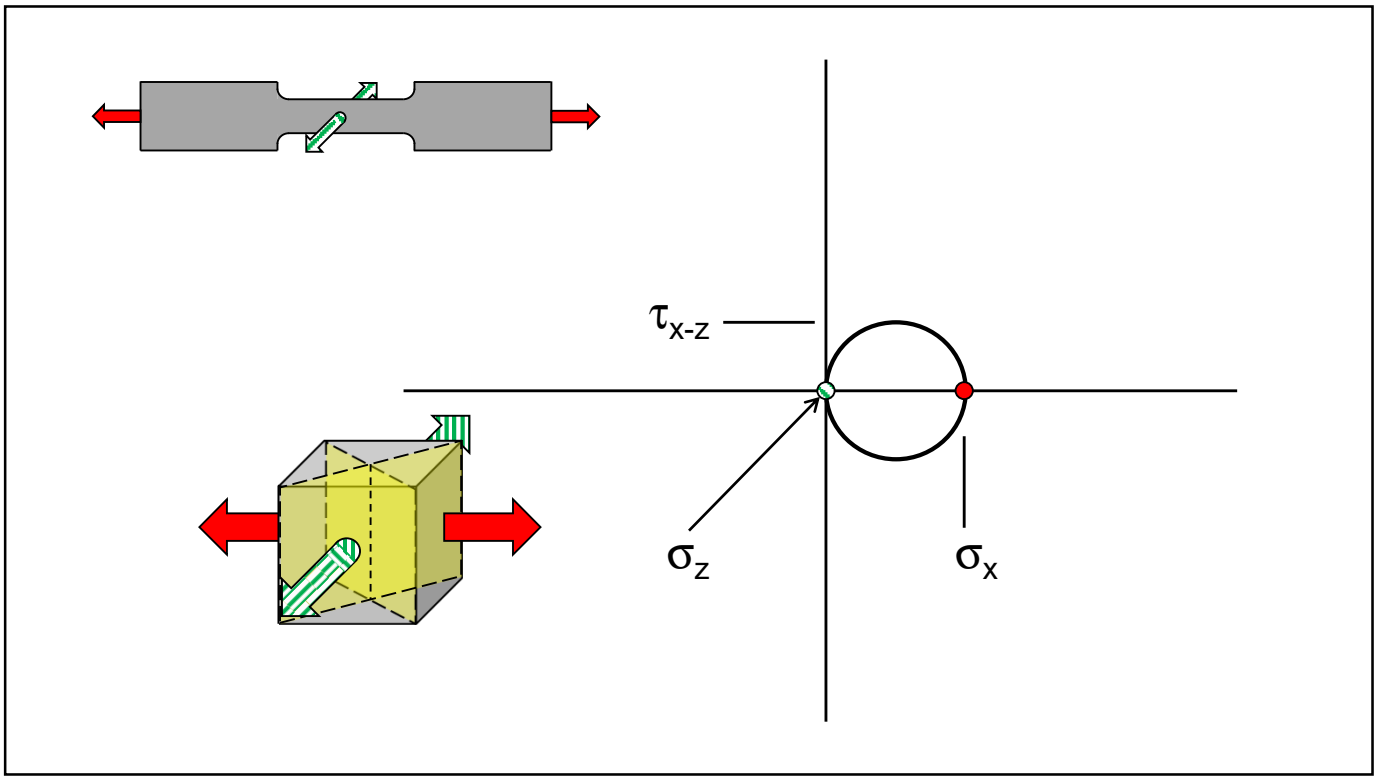

45

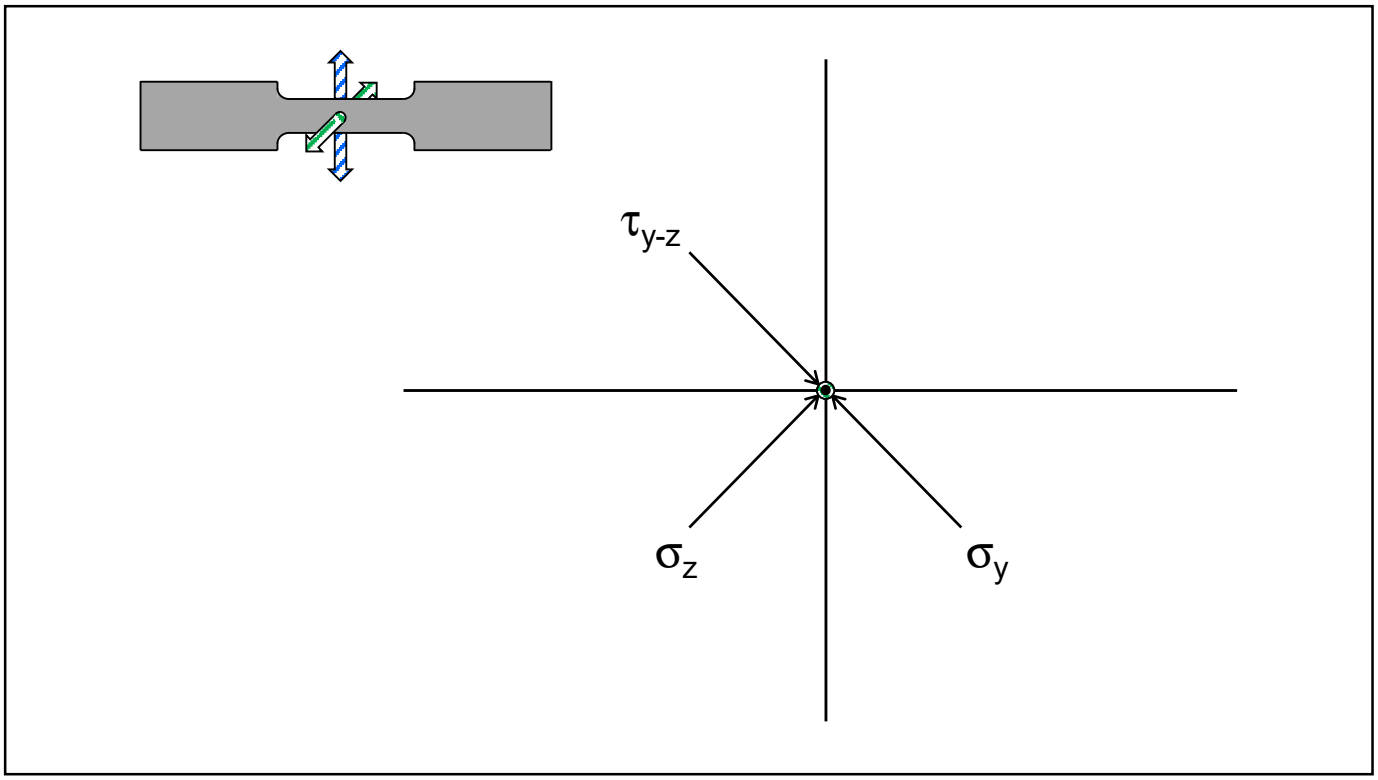

46

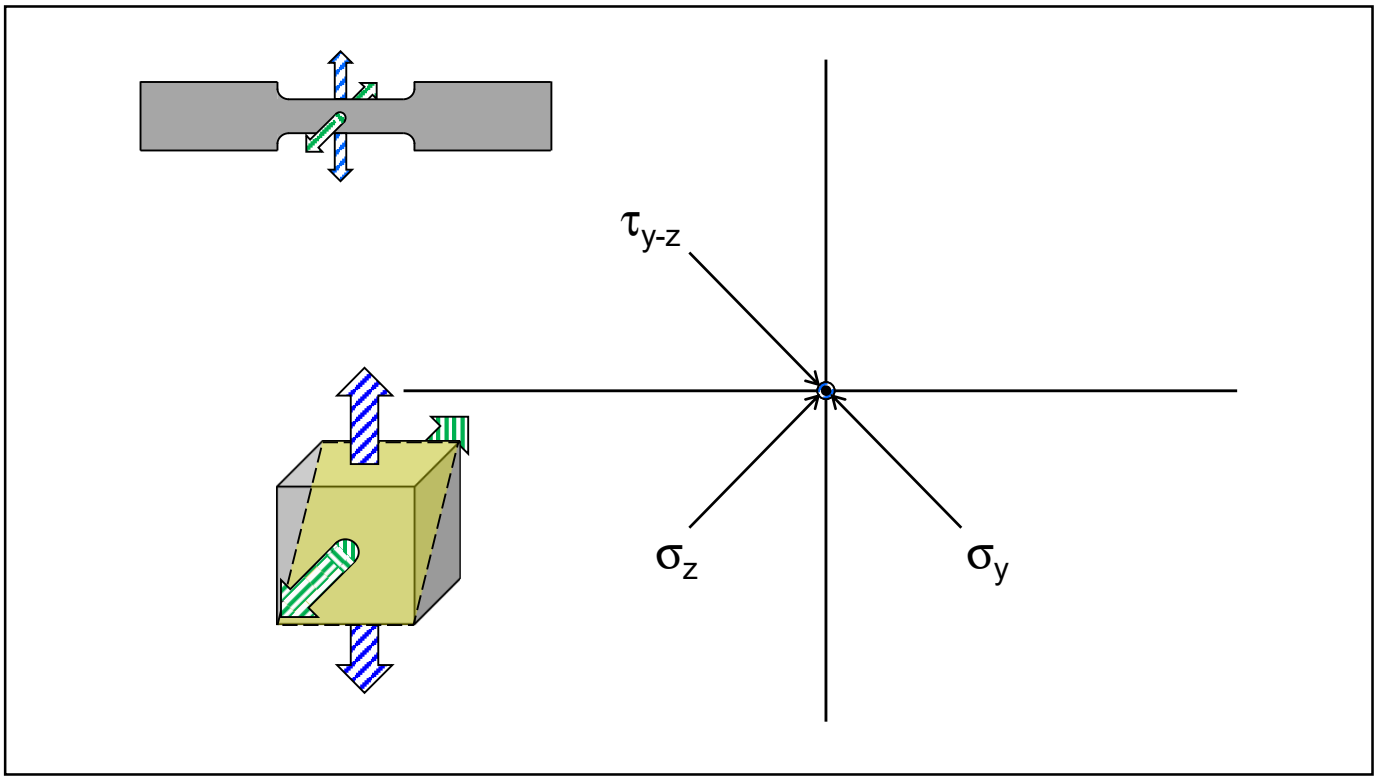

47

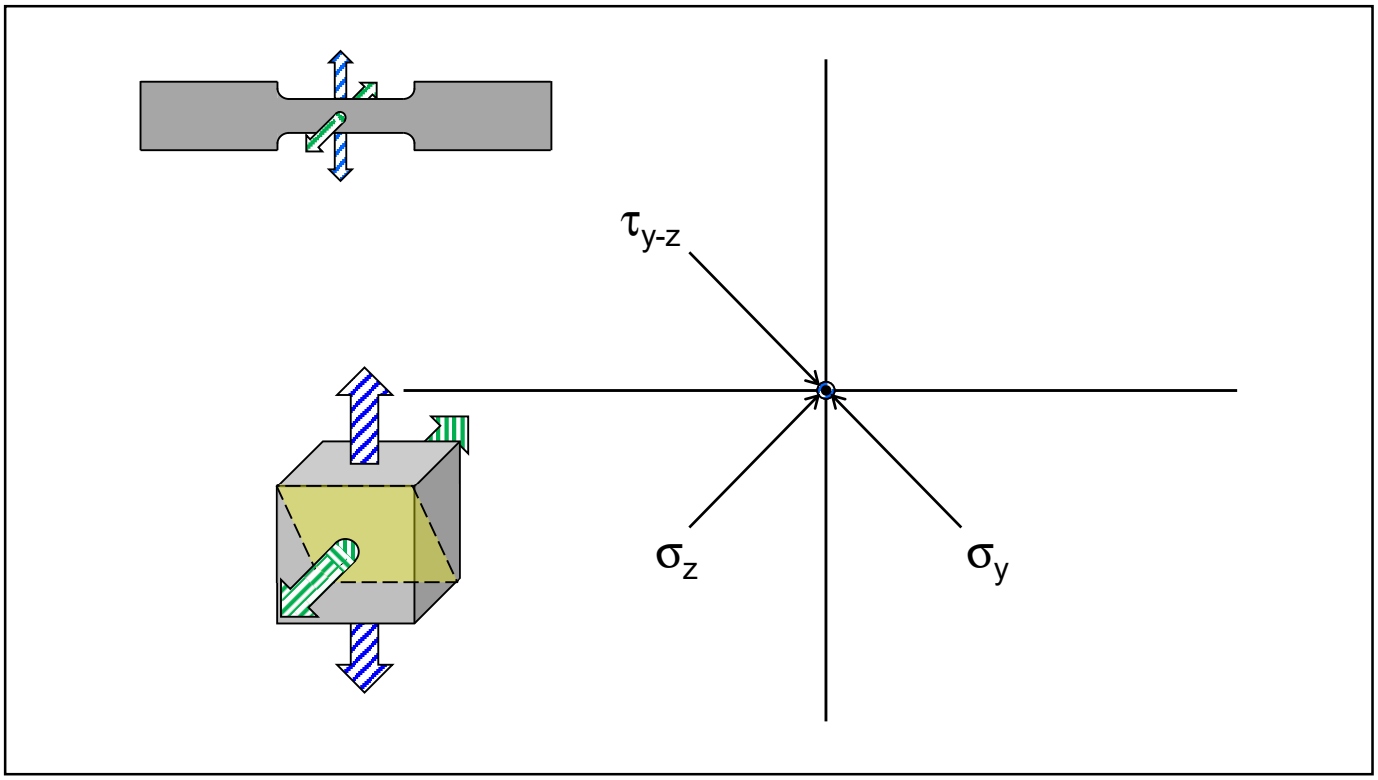

48

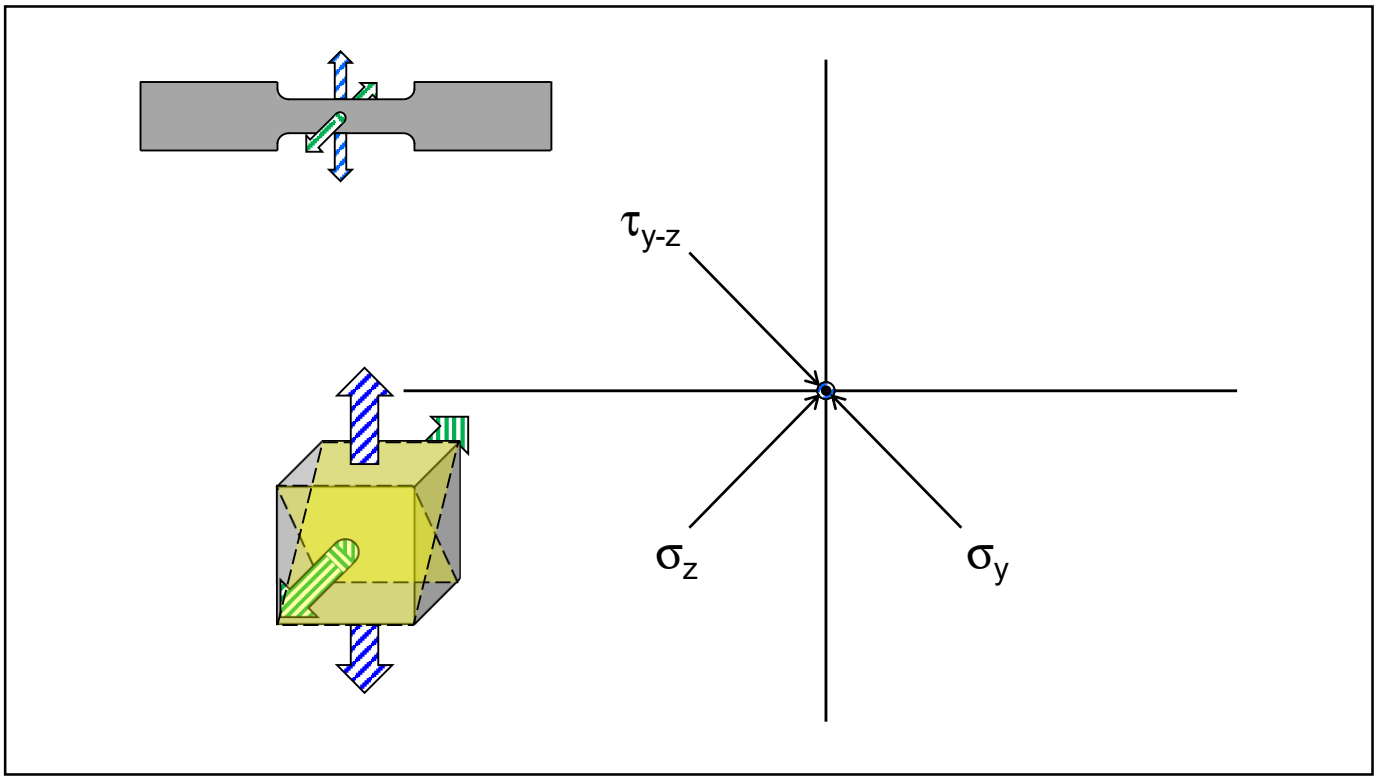
τ_{y-z}
σ_z
σ_y

49

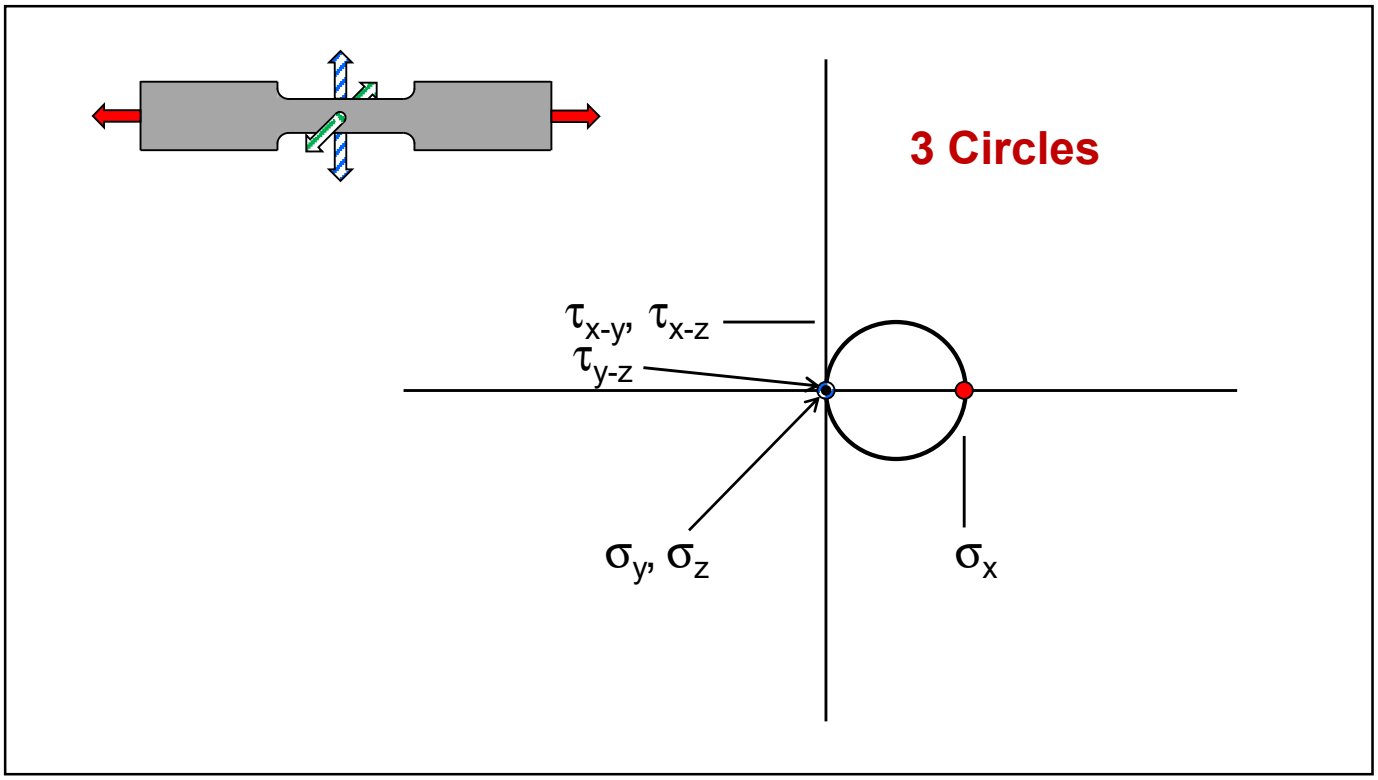
3 Circles
τ_{x-y}, τ_{x-z}
τ_{y-z}
σ_y, σ_z
σ_x

50

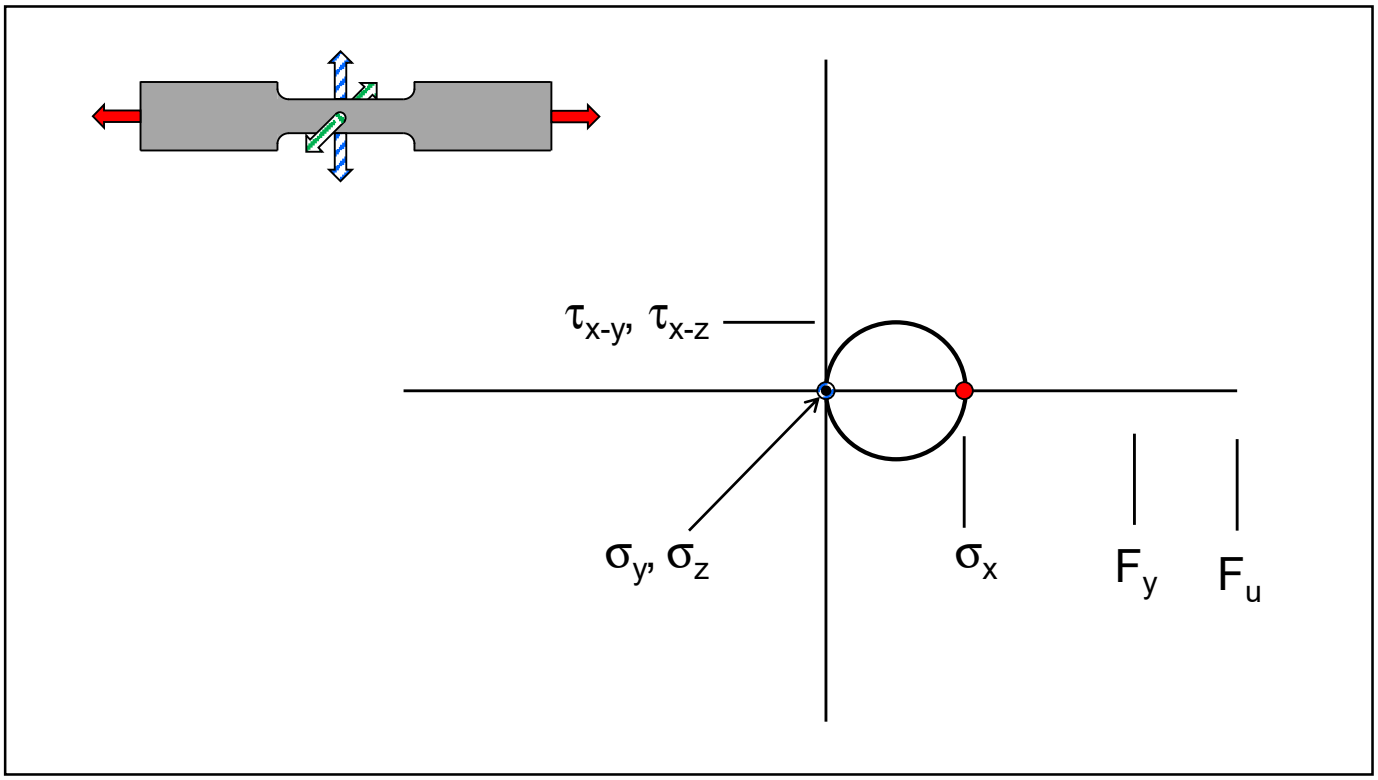

51

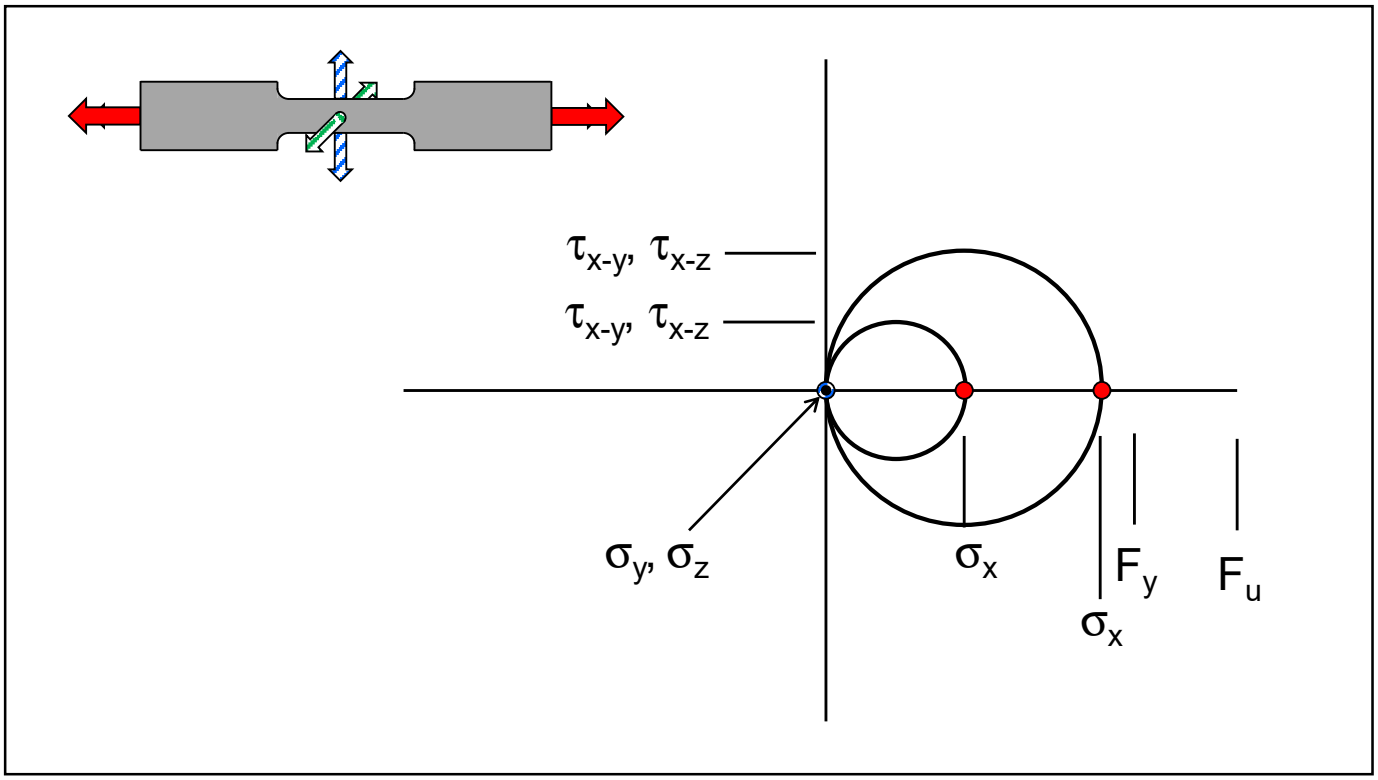

52

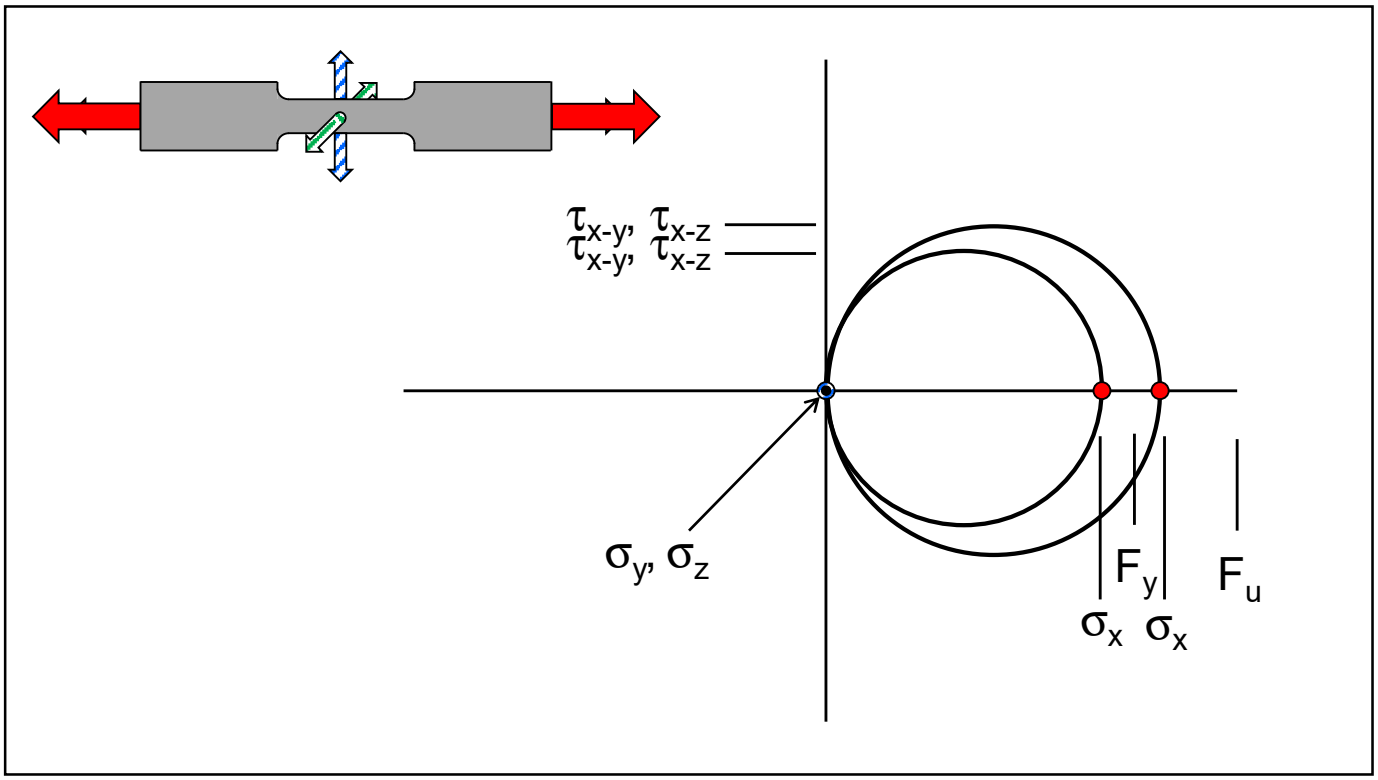
τx-y, τx-z
τx-y, τx-z
σy, σz
Fy
Fu
σx σx

53

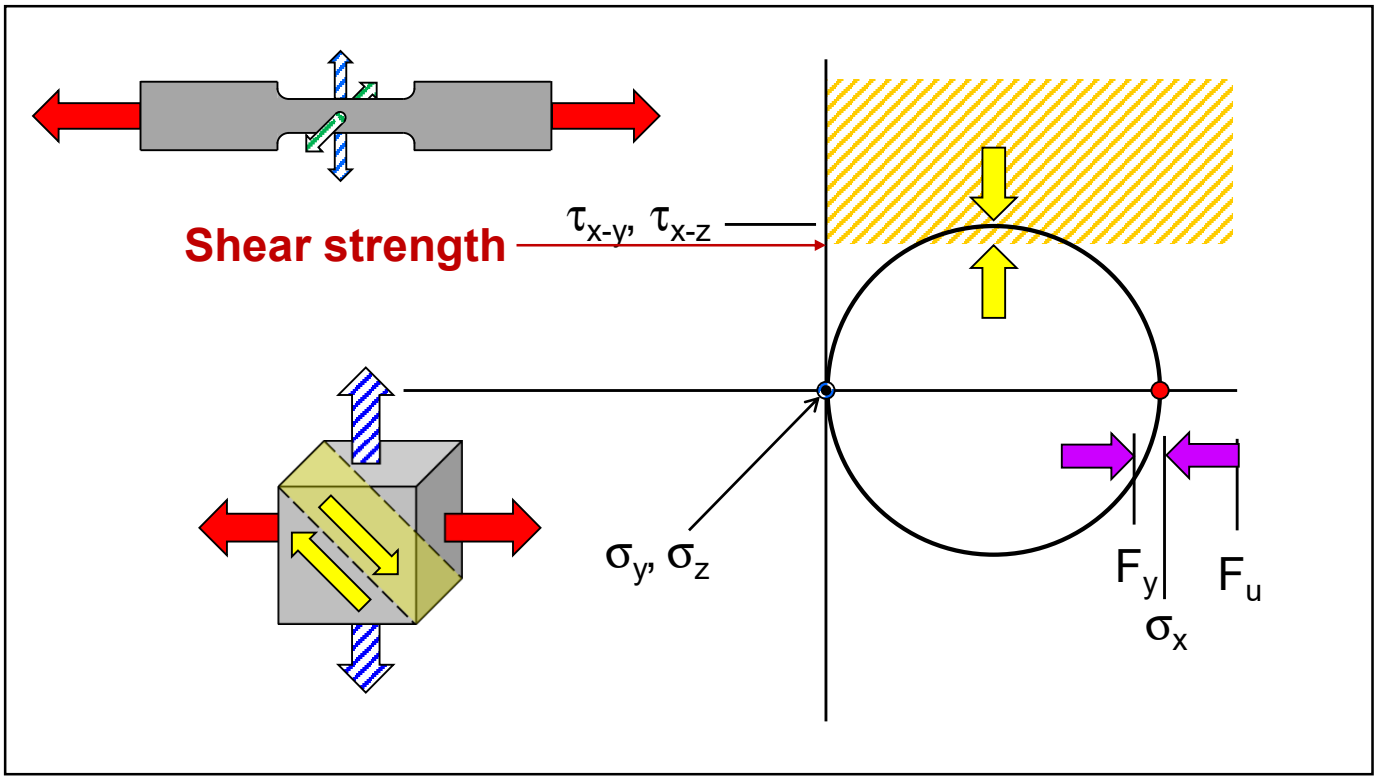
Shear strength
τx-y, τx-z
σy, σz
Fy
Fu
σx

54

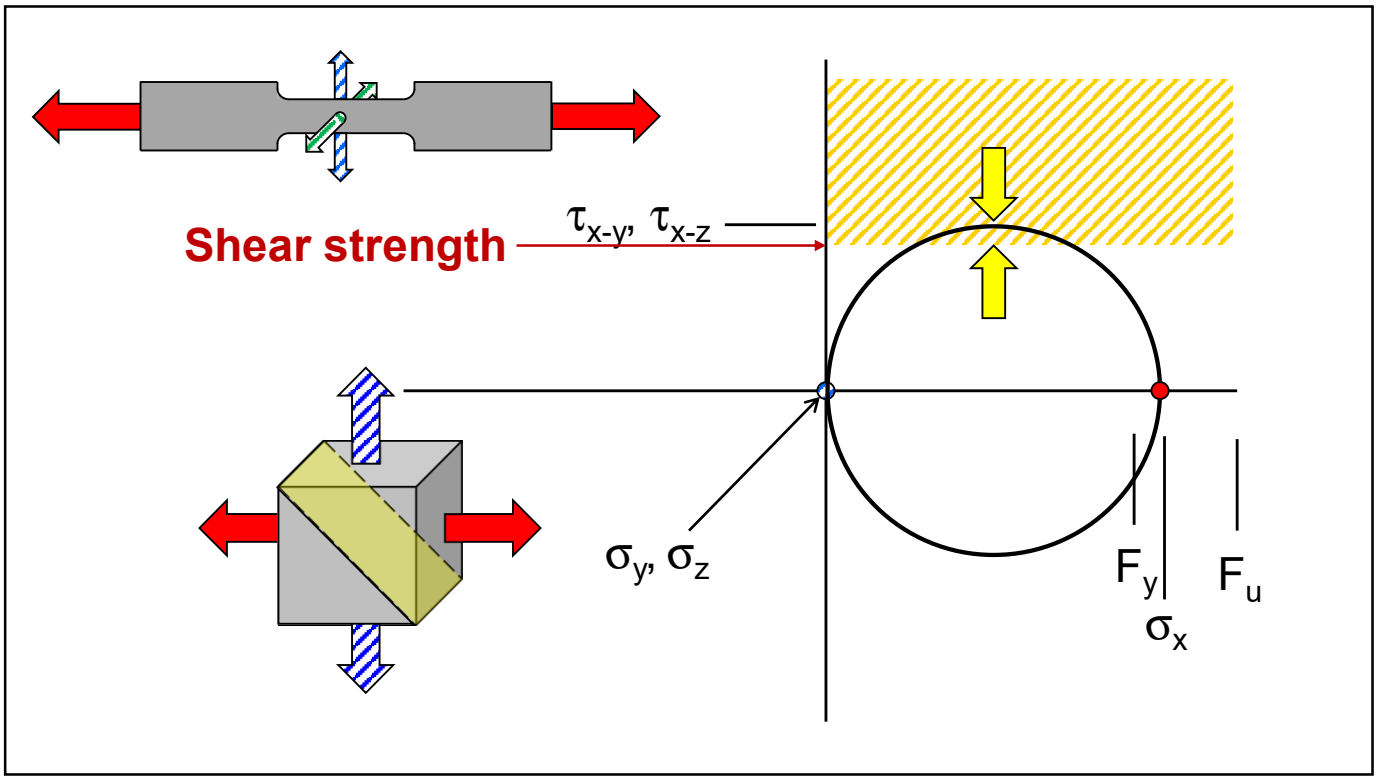
Shear strength
τ_{x-y}, τ_{x-z}
σ_y, σ_z
F_y
F_u
σ_x

55

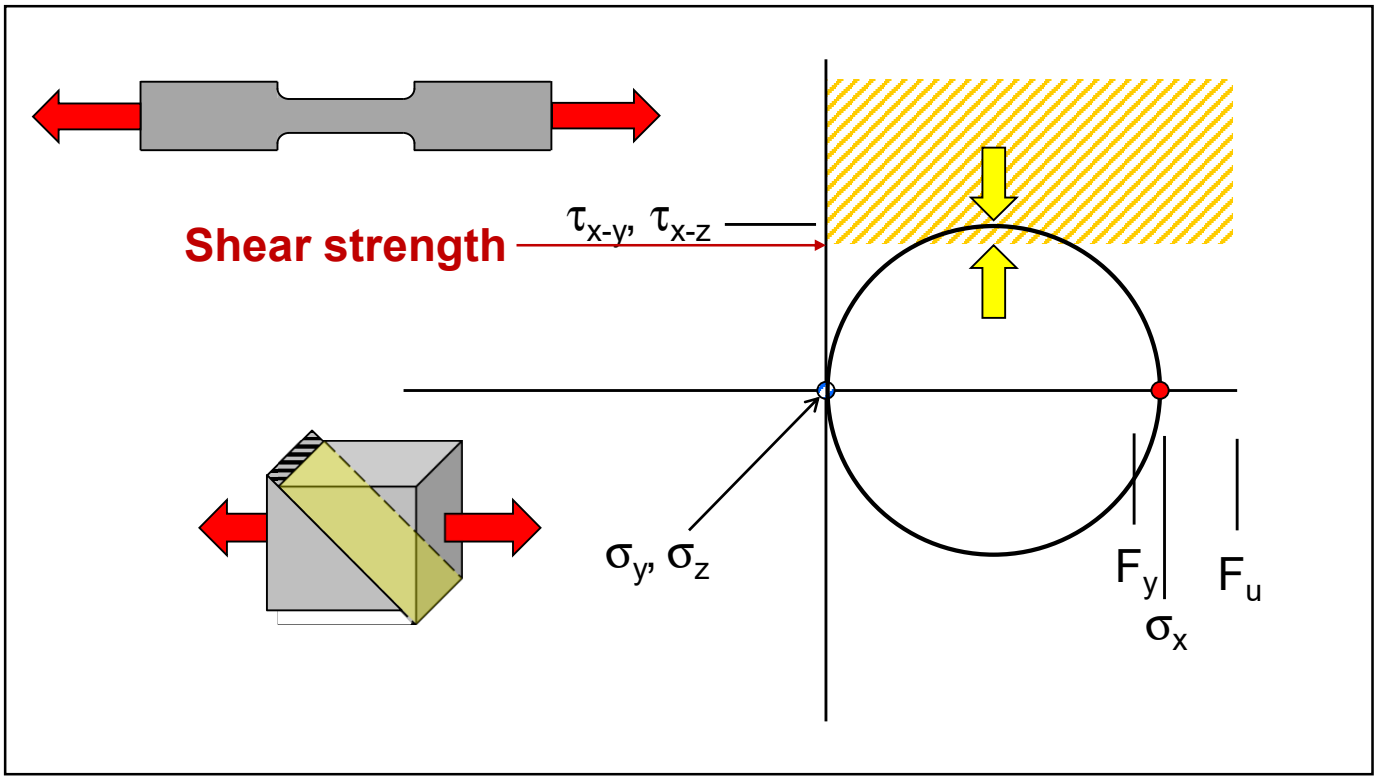
Shear strength
τ_{x-y}, τ_{x-z}
σ_y, σ_z
F_y
F_u
σ_x

56

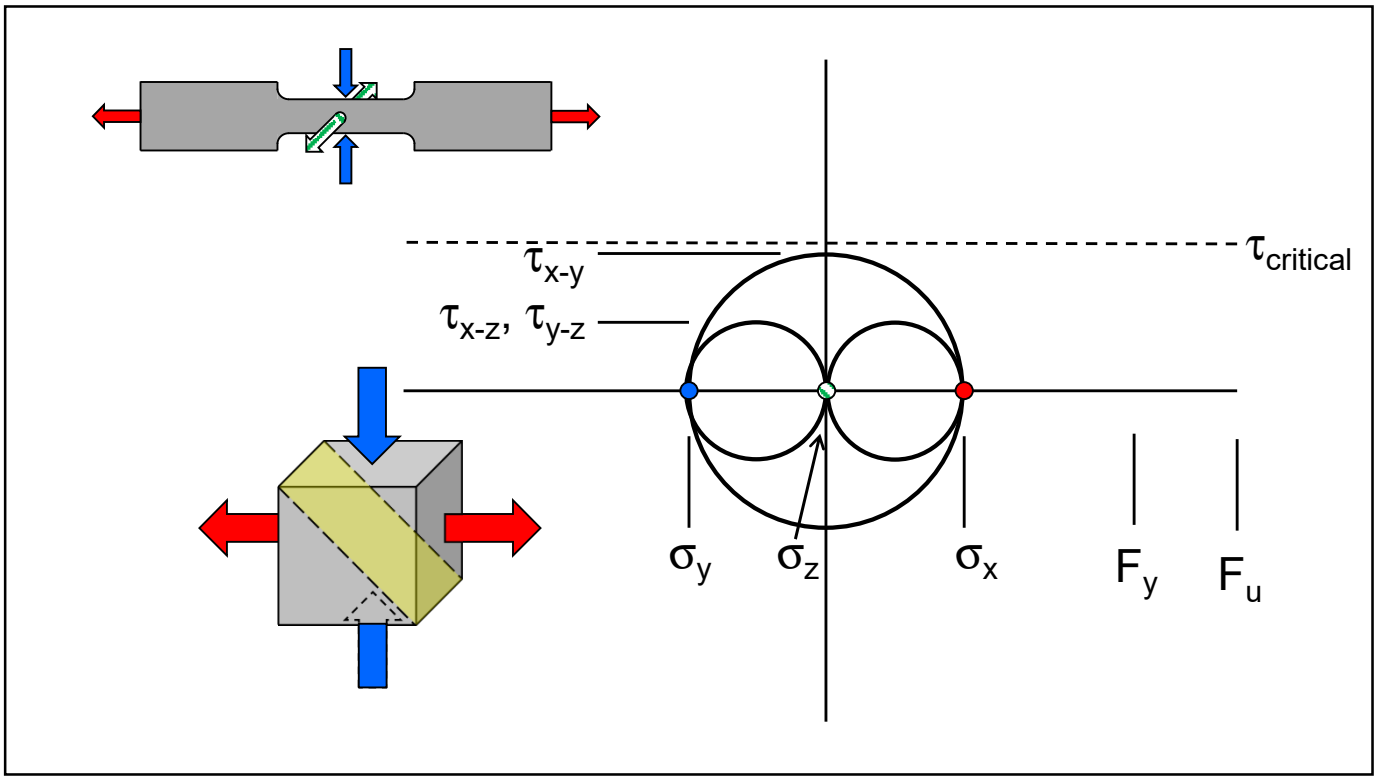
τx-y
τcritical
τx-z, τy-z
σy
σz
σx
Fy
Fu

57

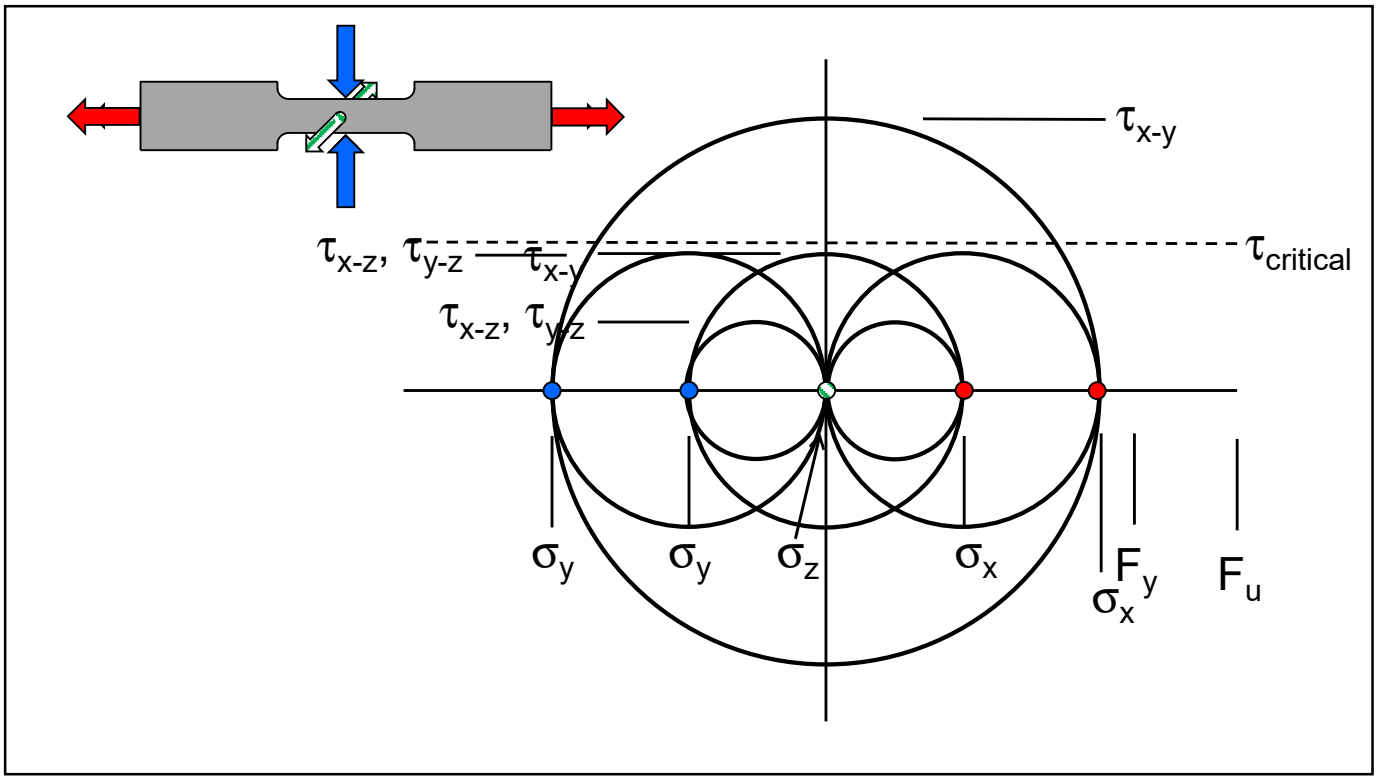
τx-y
τx-z, τy-z
τcritical
τx-y
τx-z, τy-z
σy
σy
σz
σx
Fy
σx
Fu

58

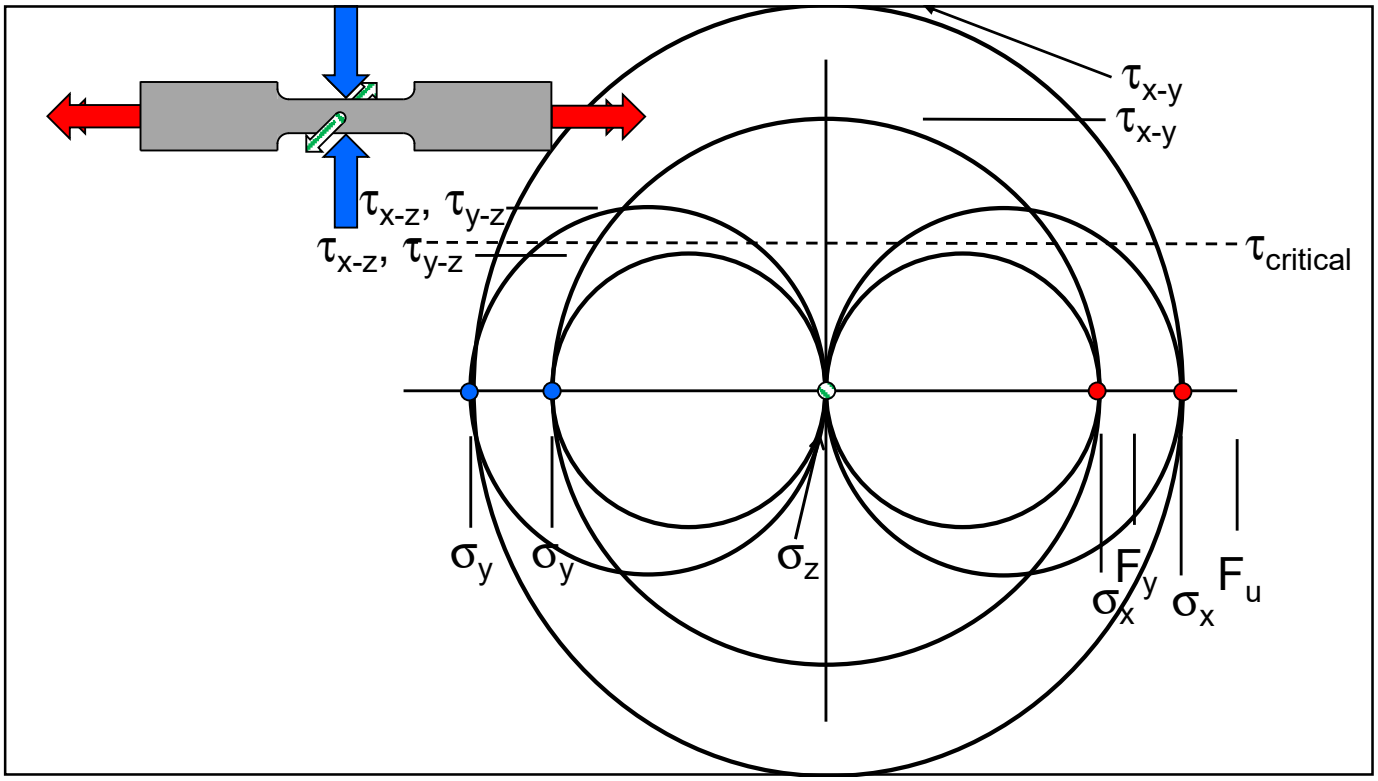
τx-y
τx-y
τx-z, τy-z
τx-z, τy-z
τcritical
σy
σy
σz
Fy
σx
σx
Fu

59

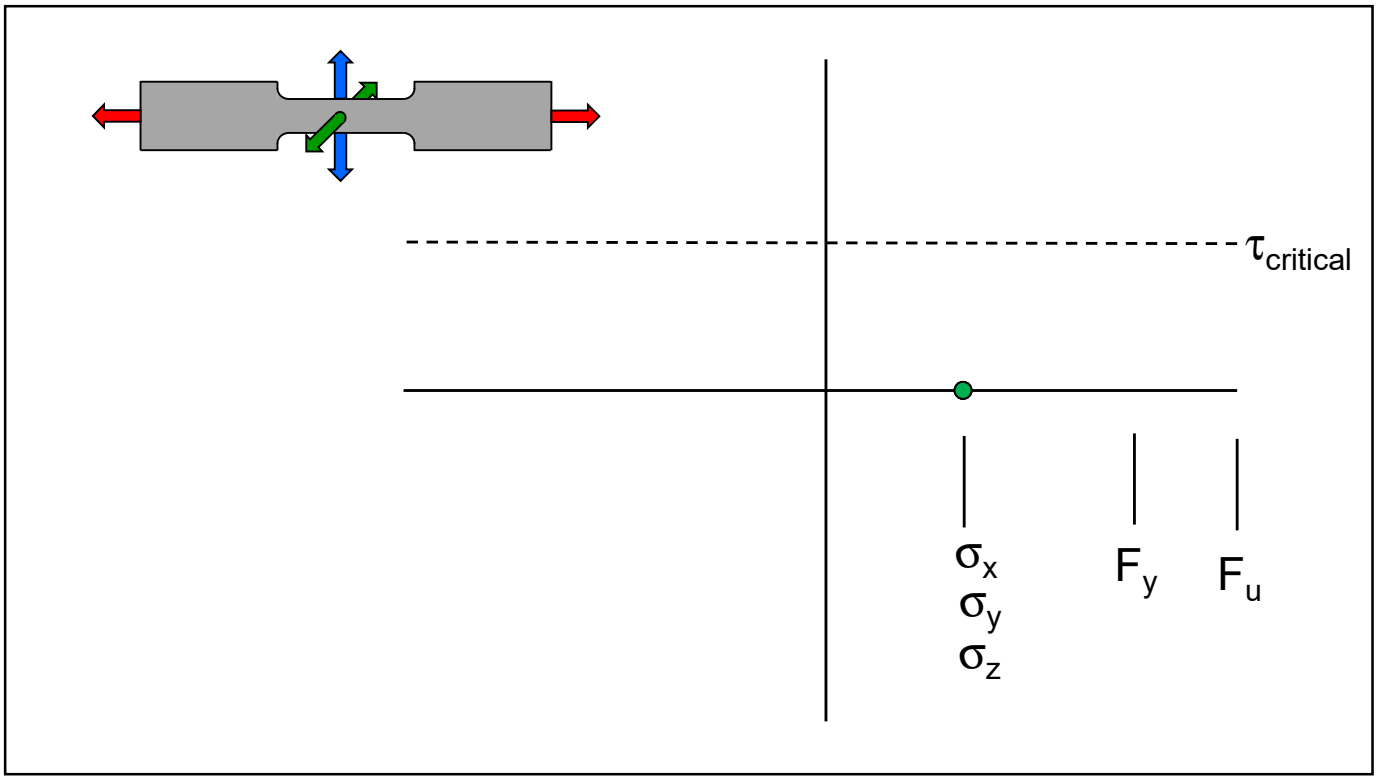
τcritical
σx
σy
σz
Fy
Fu

60

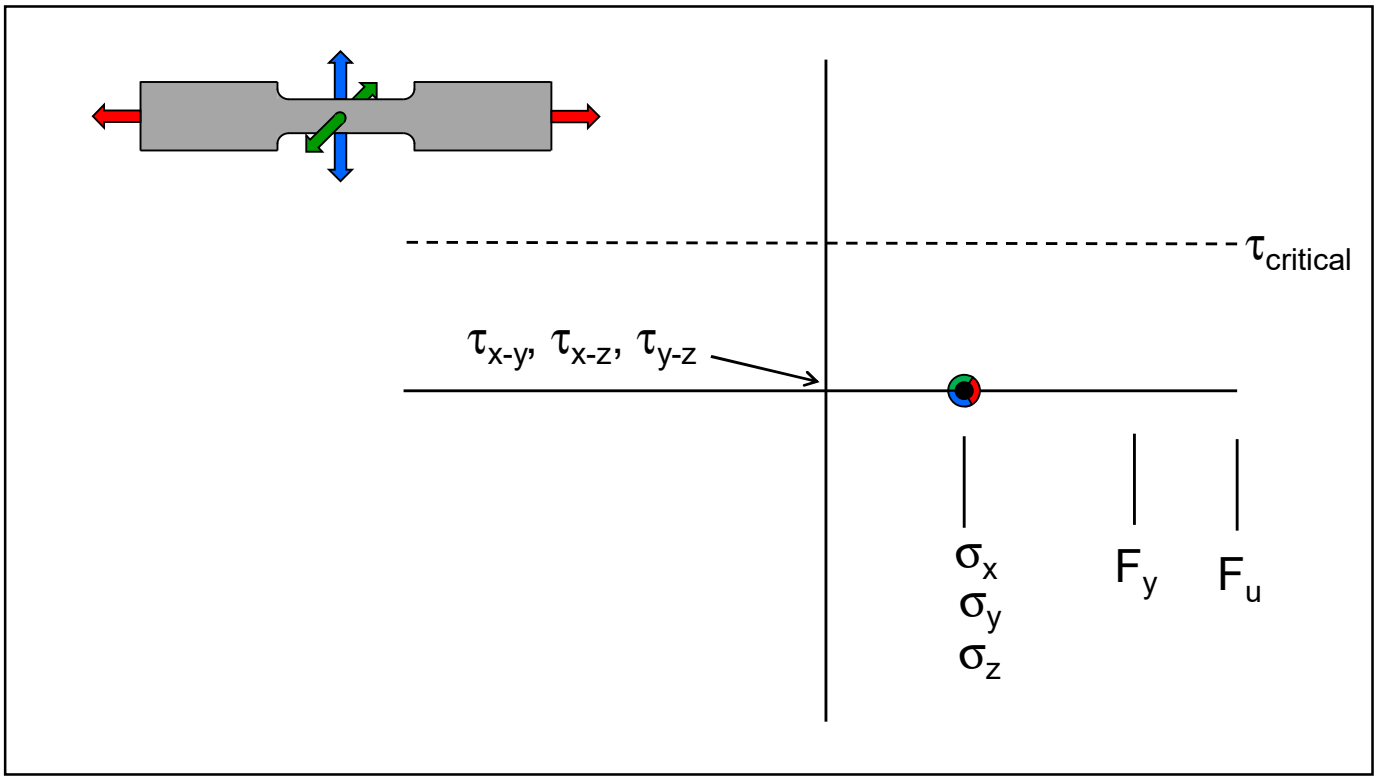
τcritical
τx-y, τx-z, τy-z
σx
σy
σz
Fy
Fu

61

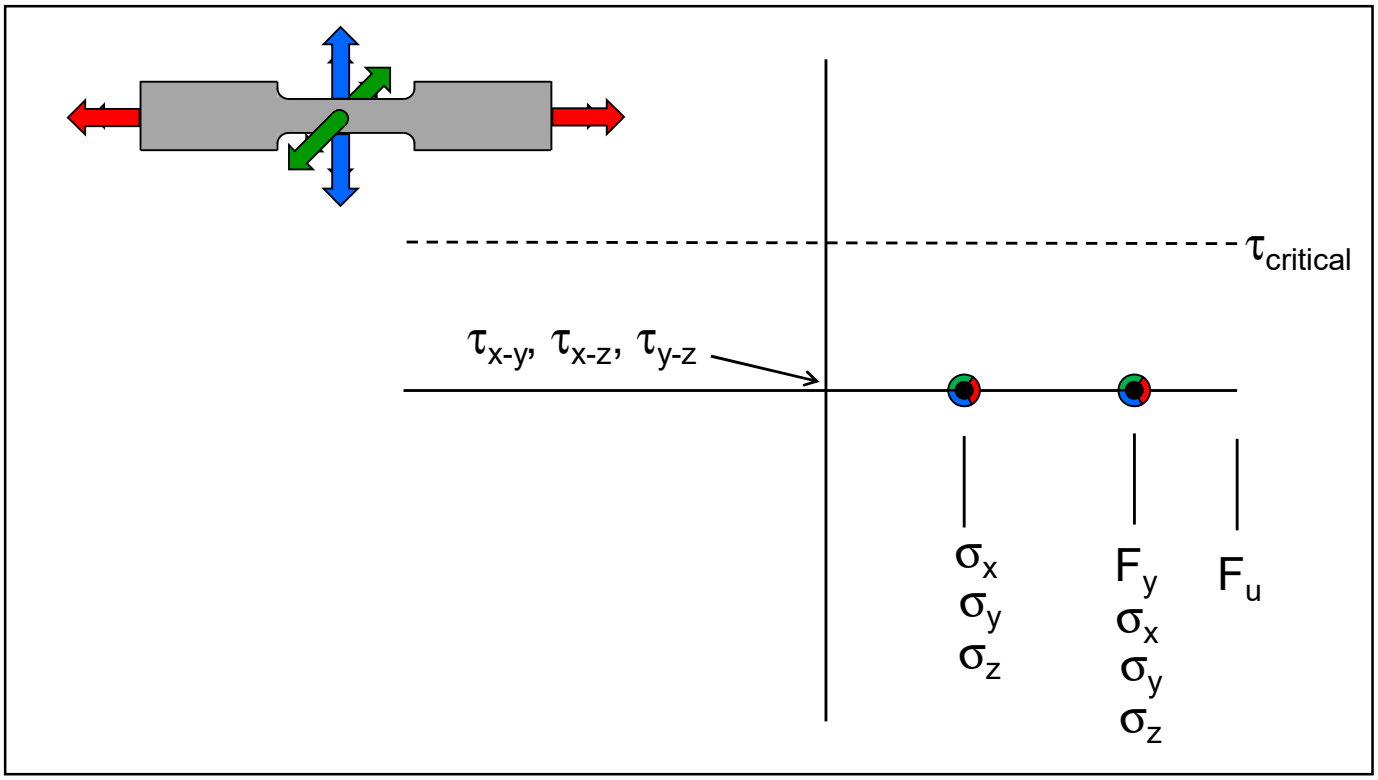
τcritical
τx-y, τx-z, τy-z
σx
σy
σz
Fy
σx
σy
σz
Fu

62

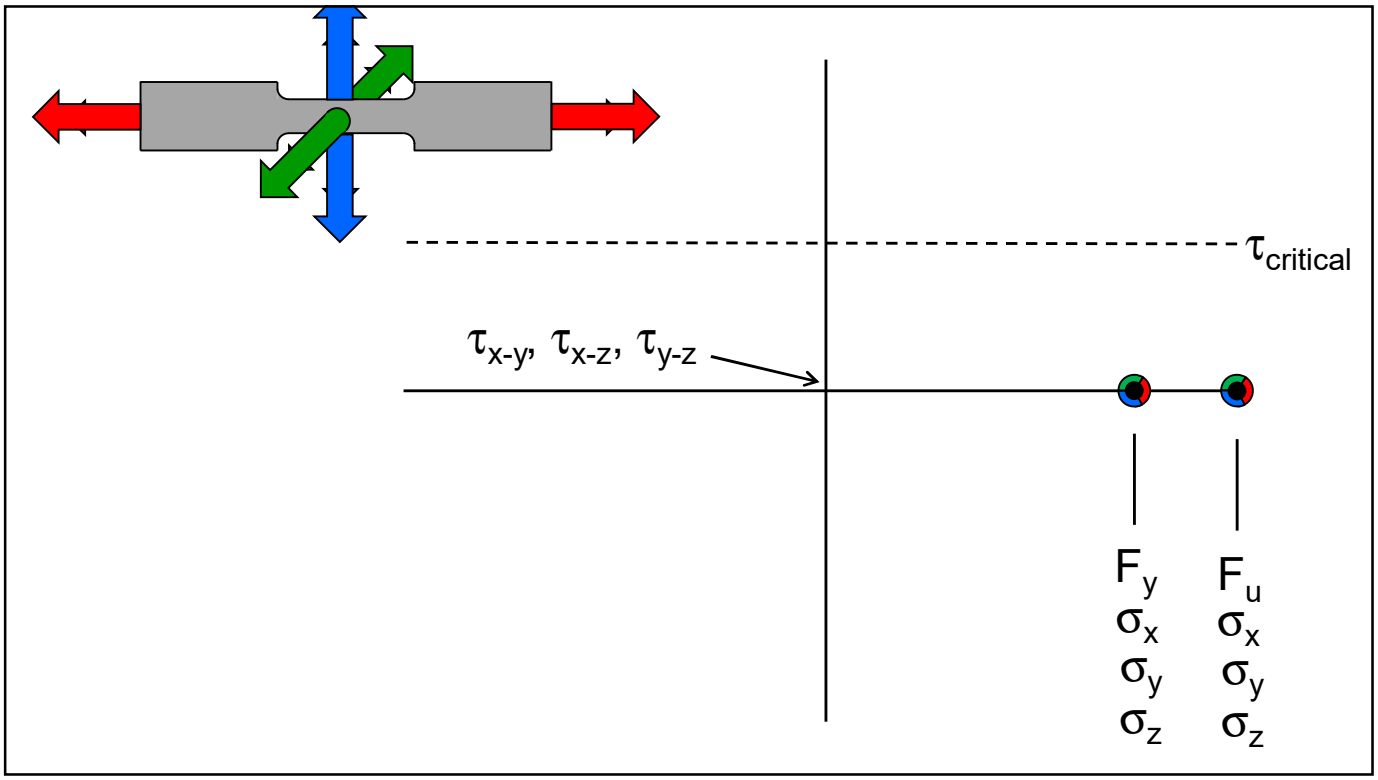
τcritical
τx-y, τx-z, τy-z
Fy
σx
σy
σz
Fu
σx
σy
σz

63

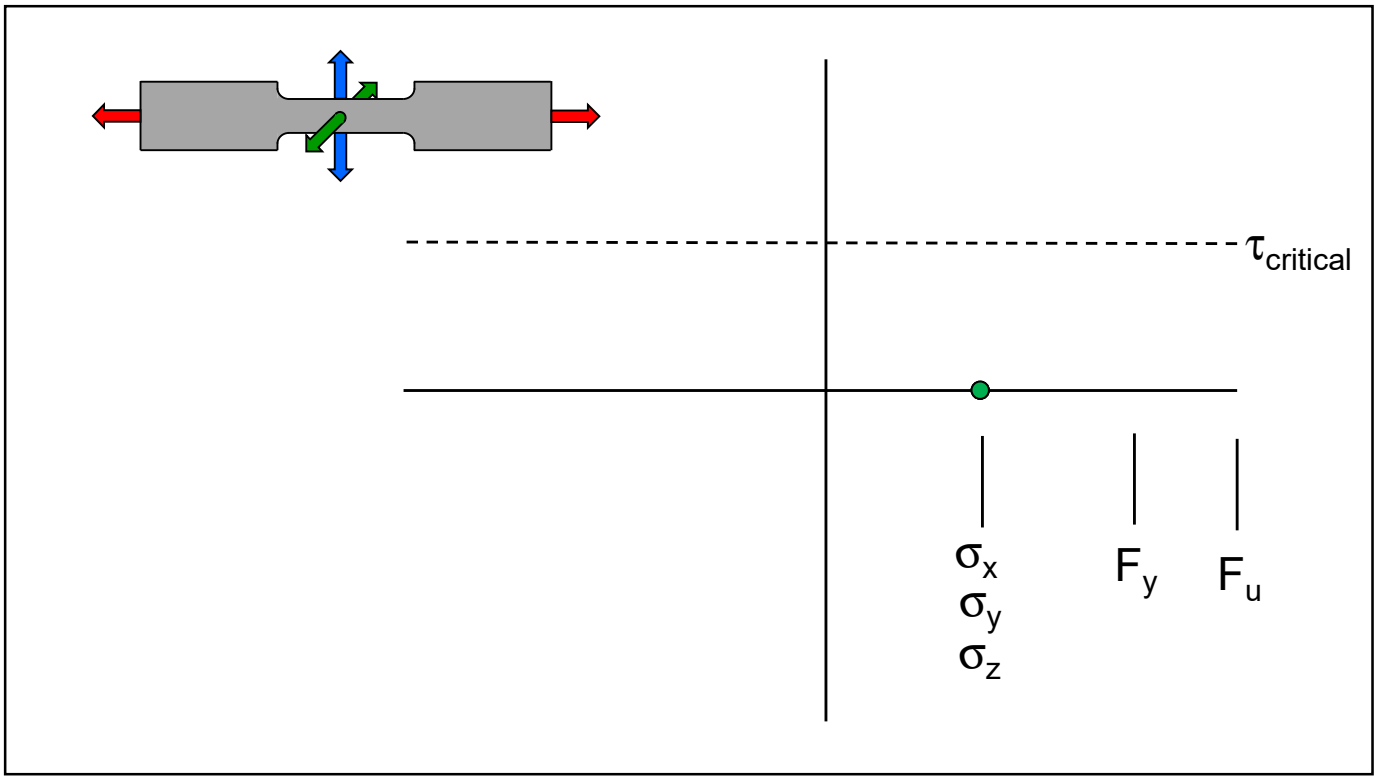
τcritical
σx
σy
σz
Fy
Fu

64

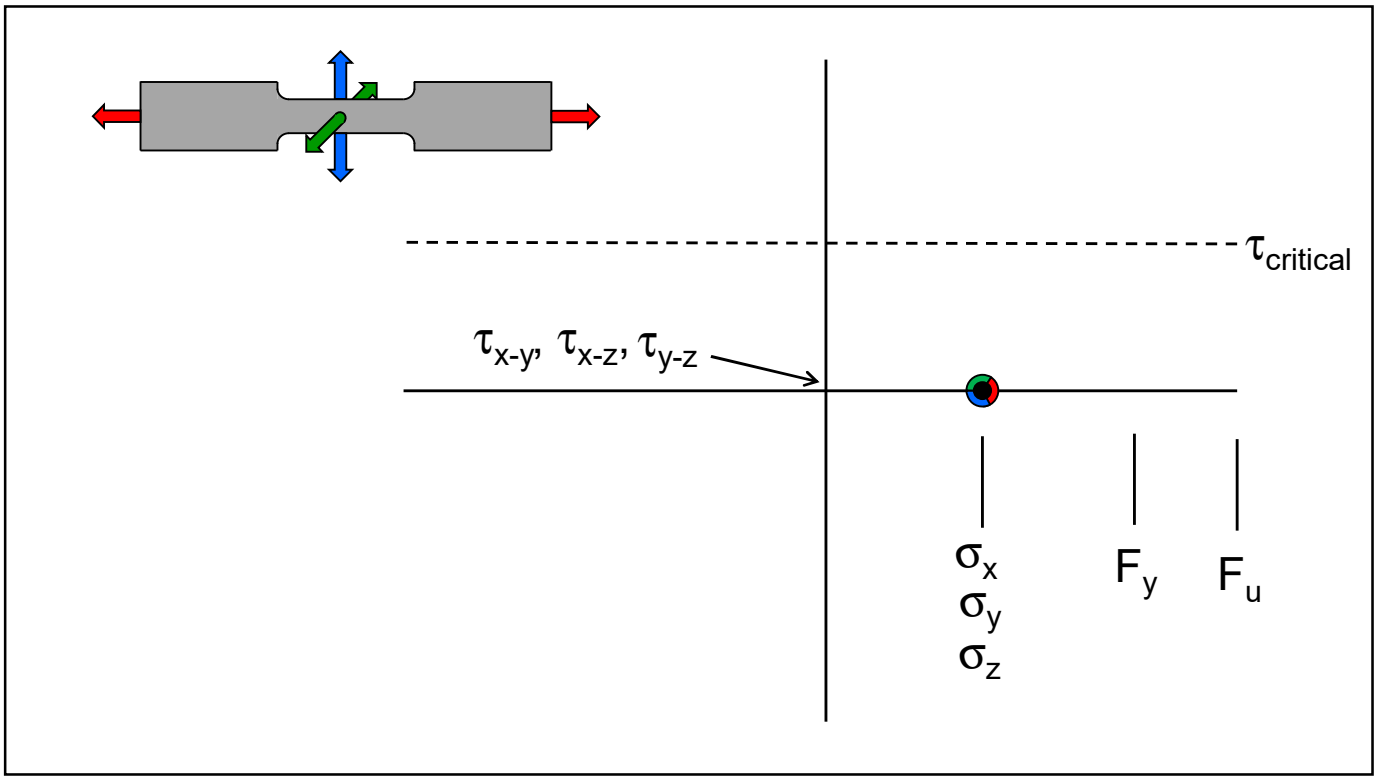
τcritical
τx-y, τx-z, τy-z
σx
σy
σz
Fy
Fu

65

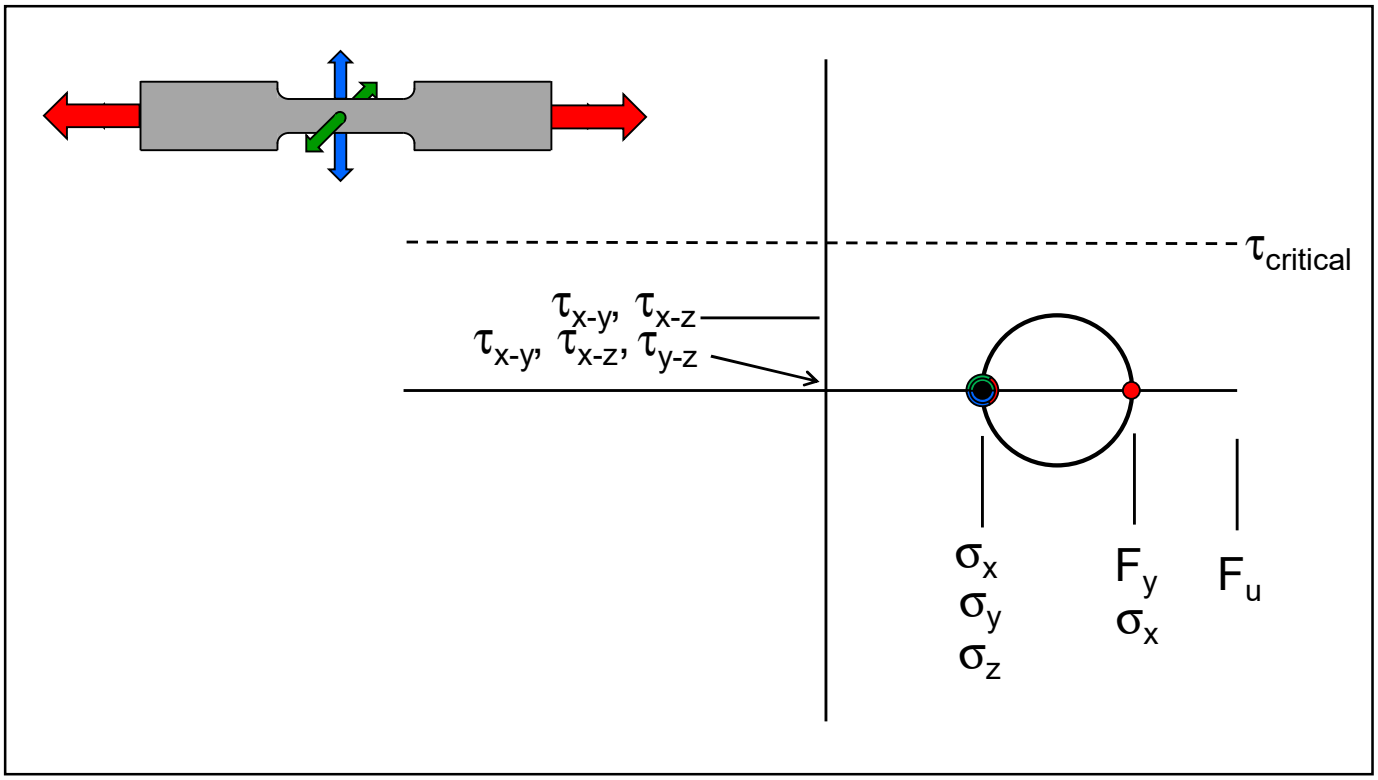
τcritical
τx-y, τx-z
τx-y, τx-z, τy-z
σx
σy
σz
Fy
σx
Fu

66

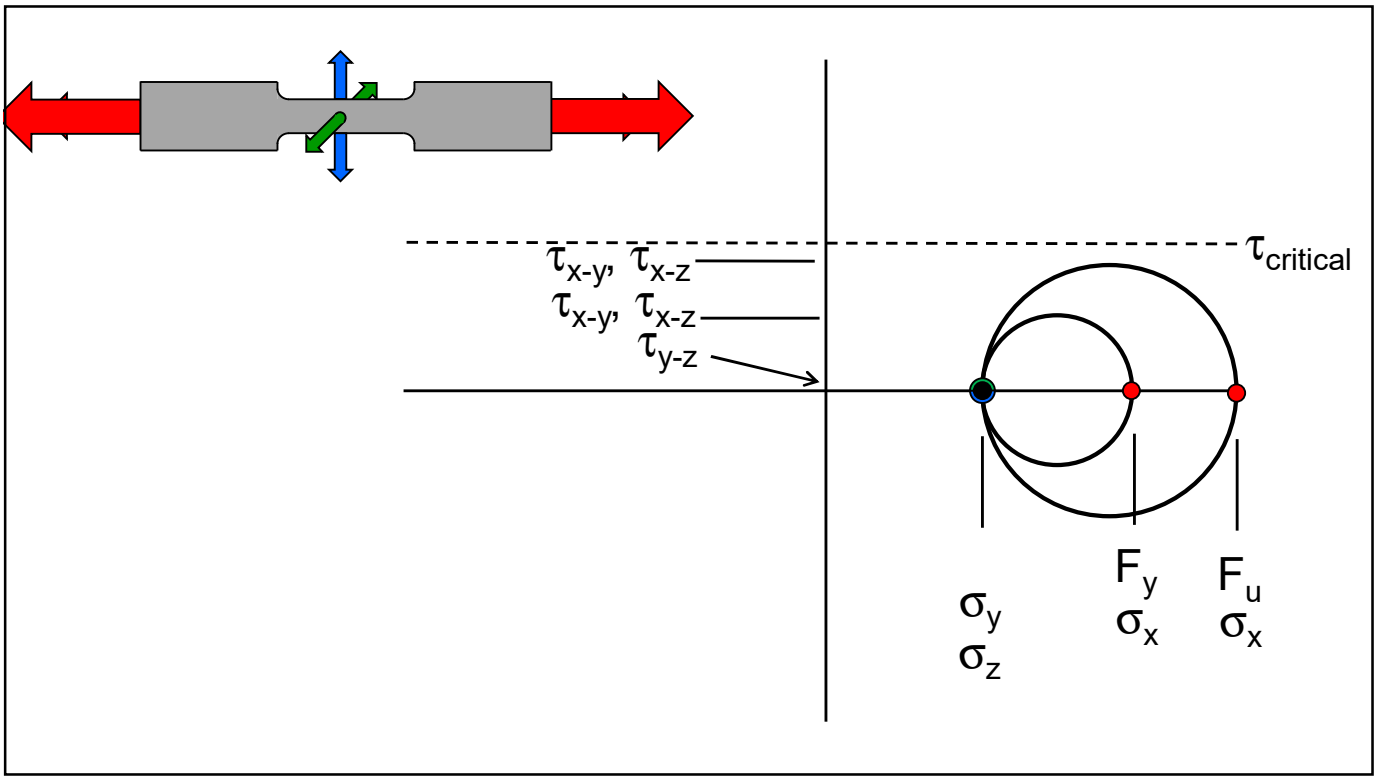

67

STRENGTH OF METALS UNDER COMBINED STRESSES

"So, if $\sigma_{max.}$ (the normal stress) first reaches the critical value for cohesive failure, the metal will be brittle (behave in a brittle fashion); whereas if $\tau_{max.}$ (the shear stress) first reaches the critical value for plastic deformation, the metal will deform, that is, behave in a ductile fashion.

68

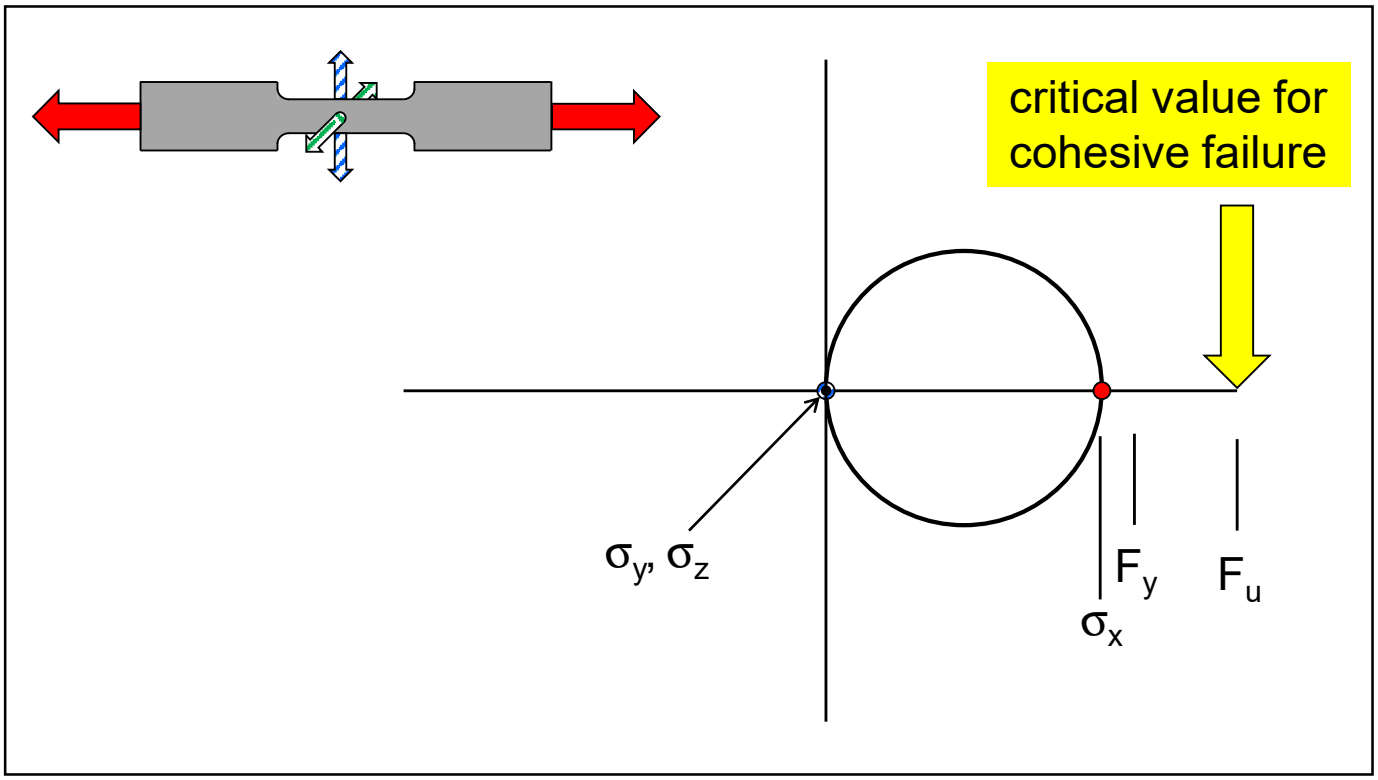

69

STRENGTH OF METALS UNDER COMBINED STRESSES

"So, if $\sigma_{max.}$ (the normal stress) first reaches the critical value for cohesive failure, the metal will be brittle (behave in a brittle fashion); whereas if $\tau_{max.}$ (the shear stress) first reaches the critical value for plastic deformation, the metal will deform, that is, behave in a ductile fashion.

70

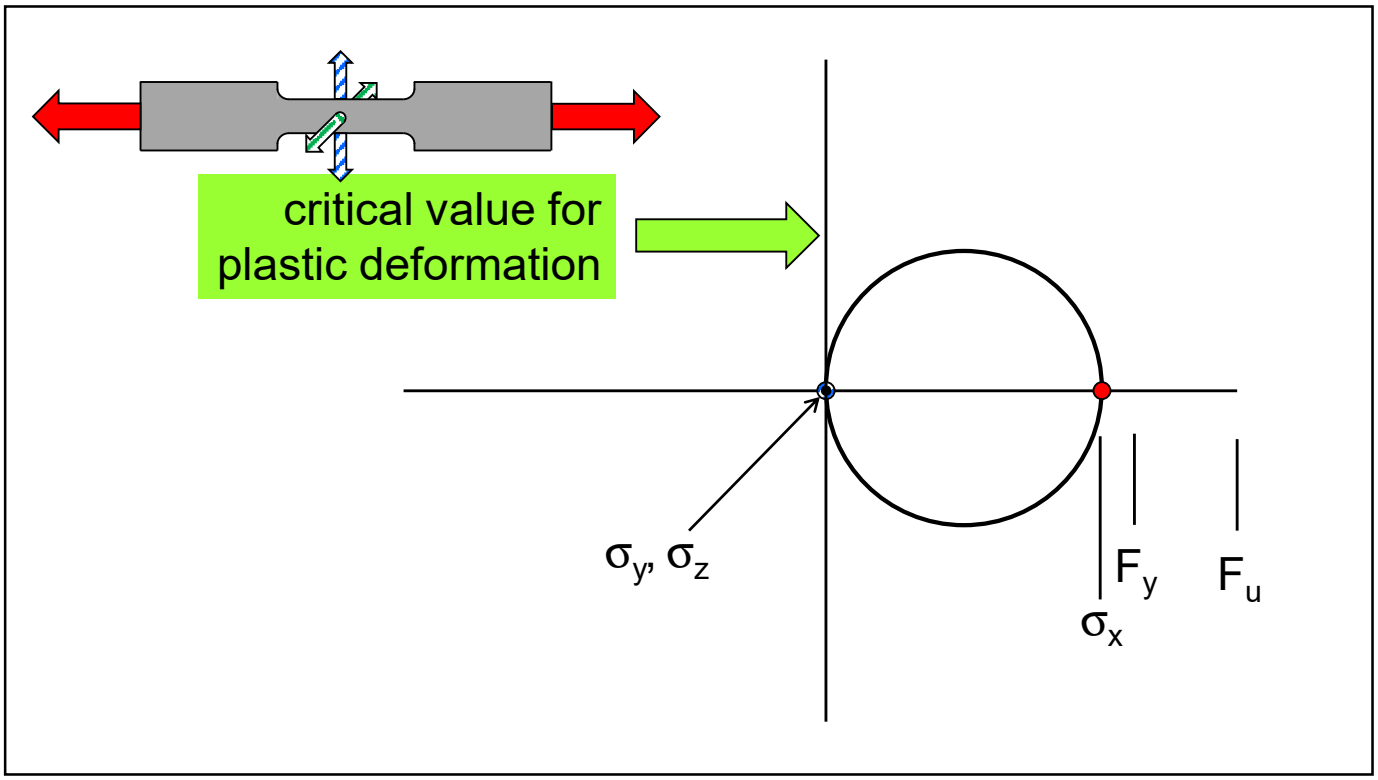

71

STRENGTH OF METALS UNDER COMBINED STRESSES

"It is well known that a metal may be ductile under one set of conditions and brittle under another. Ductility and brittleness, then are properties that must be considered as referring to some particular set of testing or service conditions."

72

Ductility: Another View

Outline

- Introduction
- A Wrong View
- A Corrected View

Ductility is function of the testing or service conditions.

73

Strength of Metals Under Combined Stresses

Maxwell Gensamer
1941

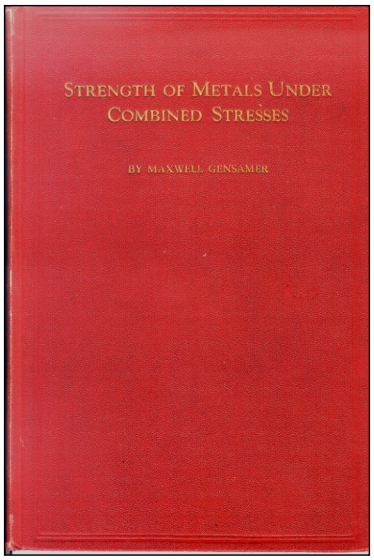

74

Through-Thickness Strength and Ductility of Column Flanges in Moment Connections

Robert Dexter

Minerva Melendrez

July 1999

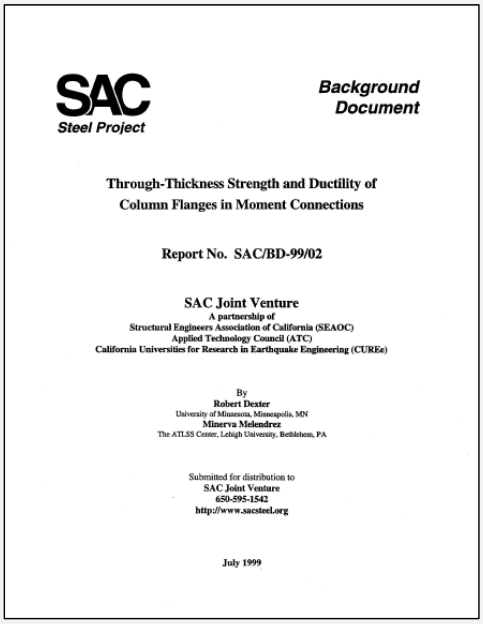

SAC
Steel Project

Background Document

Through-Thickness Strength and Ductility of Column Flanges in Moment Connections

Report No. SAC/BD-99/02

SAC Joint Venture
A partnership of
Structural Engineers Association of California (SEAOC)
Applied Technology Council (ATC)
California Universities for Research in Earthquake Engineering (CUREe)

By
Robert Dexter
University of Minnesota, Minneapolis, MN
Minerva Melendrez
The ATLSS Center, Lehigh University, Bethlehem, PA

Submitted for distribution to
SAC Joint Venture
650-595-1542
http://www.sacsteel.org

July 1999

75

Through-Thickness Strength and Ductility of Column Flanges in Moment Connections

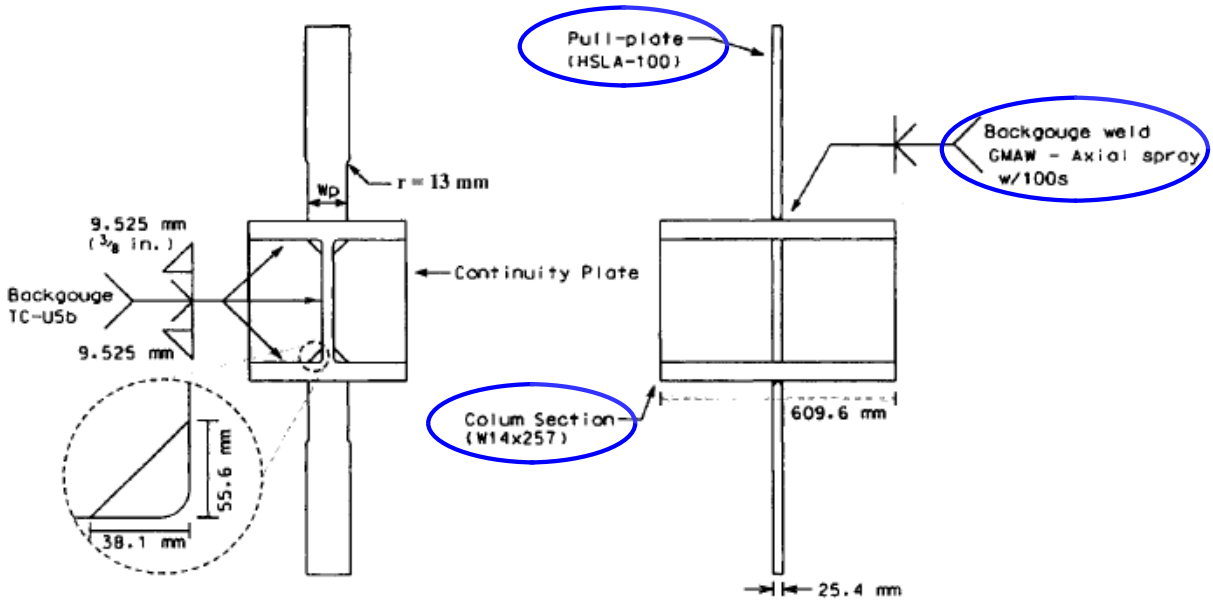

76

Through-Thickness Strength and Ductility of Column Flanges in Moment Connections

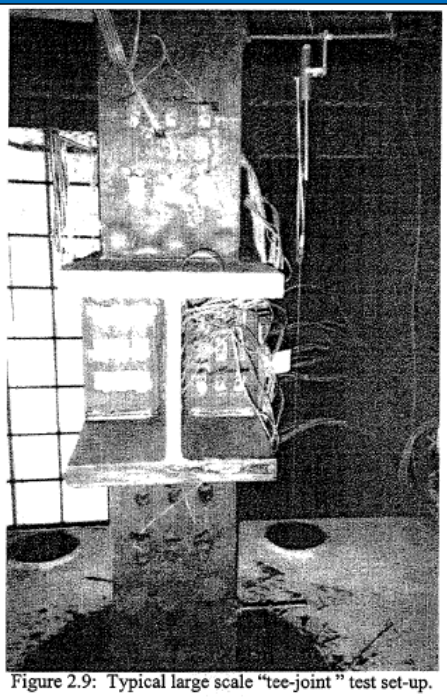

Figure 2.9: Typical large scale "tee-joint" test set-up.

77

Through-Thickness Strength and Ductility of Column Flanges in Moment Connections

ABSTRACT

More than forty tee joints were fabricated with high-strength (690 MPa yield strength) "pull" plates welded transversely to opposite flanges of short 610 mm lengths of heavy Grade 50 and Grade 65 column sections. The tee-joint specimens were tested in tension through the pull plates. The tests were performed to determine strength, deformation, and fracture behavior of the flanges of wide-flange column sections when loaded in the through-thickness direction under constrained conditions similar those of a welded beam-to-column the connection. (Each pull plate represents a beam tension flange.) The through-thickness strength of the column flanges exceeded 690 MPa in these tests. This result can be explained by the existence of triaxial constraint of the column flange material, which creates hydrostatic tension stresses, raising the apparent through-thickness strength. This effect is an inherent consequence of the Von-Mises and other yield criteria. Three-dimensional finite-element analyses of these specimens using the Von-Mises yield criterion predict this effect and give results consistent with the experiments.

78

Through-Thickness Strength and Ductility of Column Flanges in Moment Connections

….Grade 50 and Grade 65 column sections.

More than forty tee joints were fabricated with high-strength (690 MPa yield strength) "pull" plates welded transversely to opposite flanges of short 610 mm lengths of heavy Grade 50 and

The through-thickness strength exceeded 690 MPa .

r of the
flanges of wide-flange column sec… when loaded in the through-thickness direction under constrained conditions similar those o… welded beam-to-column the connection. (Each pull plate represents a beam tension flange.) The through-thickness strength of the column flanges exceeded 690 MPa in these tests. This result can be explained by the existence of triaxial constraint of the column flange material, which creates hydrostatic tension stresses, raising the apparent through-thickness strength. This effect is an inherent consequence of the Von-Mises and other yield criteria. Three-dimensional finite-element analyses of these specimens using the Von-Mises yield criterion predict this effect and give results consistent with the experiments.

79

Through-Thickness Strength and Ductility of Column Flanges in Moment Connections

This result can be explained by the existence of triaxial constraint of the column flange material, which creates hydrostatic tension stresses, raising the apparent through-thickness strength.

plate represents a … tension flange.) The through-thickness strength of the column flanges exceeded 690 MPa in these tests. This result can be explained by the existence of triaxial constraint of the column flange material, which creates hydrostatic tension stresses, raising the apparent through-thickness strength. This effect is an inherent consequence of the Von-Mises and other yield criteria. Three-dimensional finite-element analyses of these specimens using the Von-Mises yield criterion predict this effect and give results consistent with the experiments.

80

Through-Thickness Strength and Ductility of Column Flanges in Moment Connections

4.1 Conclusions

1) Forty-one tee tests were performed including 27 specimens with good welds, 7 specimens with intentionally poor welds or details intended to induce a brittle fracture, and 7 specimens with eccentricity intended to induce bending and prying. These tee-tests showed that the

These tee-tests show that the through-thickness tensile strength of constrained column flange material in a beam-to-column joint exceeds the minimum specified ultimate strength of Grade 50 or Grade 65 beam flanges.

81

Through-Thickness Strength and Ductility of Column Flanges in Moment Connections

7) The yield strength in the uniaxial through-thickness tensile specimens can be as low as 90 percent of the yield strength in the longitudinal direction. The reduction in area in this direction can be as low as 13 percent, compared to typical values of 70 percent. This low ductility is not a significant problem, because the through thickness strength exceeds the

The yield strength in the uniaxial through-thickness tensile specimens can be as low as 90 percent of the yield strength in the longitudinal direction. The reduction in area in this direction can be as low as 13 percent, compared to typical values of 70 percent.

82

Through-Thickness Strength and Ductility of Column Flanges in Moment Connections

7) The yield strength in the uniaxial through-thickness tensile specimens can be as low as 90 percent of the yield strength in the longitudinal direction. The reduction in area in this direction can be as low as 13 percent, compared to typical values of 70 percent. This low ductility is not a significant problem, because the through thickness strength exceeds the

This low ductility is not a significant problem, because the through thickness strength exceeds the force and stress levels that could be produced by beam flanges. If the column flange does not yield in the through-thickness direction, there is no significant demand for ductility in the through-thickness direction.

83

TRIAXIALITY AND FRACTURE OF STEEL MOMENT CONNECTIONS

TRIAXIALITY AND FRACTURE OF STEEL MOMENT CONNECTIONS

By B. W. Schafer,[1] Associate Member, ASCE, R. P. Ojdrovic,[2] Member, ASCE, M. S. Zarghamee,[3] Fellow, ASCE

ABSTRACT: The connections of welded steel moment frames undergo a complex multiaxial state of stress that leads to high levels of stress triaxiality. As triaxiality increases, the propensity for fracture increases. Classic engineering models of fracture and modern microscale models of fracture mechanisms explicitly consider the role of triaxiality. Nonetheless, triaxiality is generally not directly considered by structural engineers. In this paper, triaxiality is defined as the ratio of the maximum principal stress to the von Mises stress. Triaxiality and maximum principal stress demands are investigated for tests on fractured notched round bars, small-scale tension specimens, and a full-scale moment connection. Based on analysis of the tests, it is proposed that, for fractures driven by triaxiality demands, the maximum principal stress at fracture is a function of the level of triaxiality. Calculation of the triaxiality demands requires 3D nonlinear analysis and depends on the loading, connection geometry, and postyield stress-strain relationships of all parent and weld metals. Examination of a welded steel moment connection indicates particularly high triaxiality demands. The triaxiality demands indicate that fracture of these connections may be governed by triaxiality even when high toughness parent and weld metals are used.

Journal of Structural Engineering, 2000, 126(10): 1131-1139

84

TRIAXIALITY AND FRACTURE OF STEEL MOMENT CONNECTIONS

Triaxiality and Fracture of Steel Moment Connections

By B. W. Schafer,[1] Associate Member, ASCE, R. P. Ojdrovic,[2] Member, ASCE, M. S. Zarghamee,[3] Fellow, ASCE

Abstract: The connections of welded steel moment frames undergo a complex multiaxial state of stress that leads to high levels of stress triaxiality. As triaxiality increases, the propensity for fracture increases. Classic engineering models of fracture and modern microscale models of fracture mechanisms explicitly consider the role of triaxiality. Nonetheless, triaxiality is generally not directly considered by structural engineers. In this paper, triaxiality is defined as the ratio of the maximum principal stress to the von Mises stress. Triaxiality and maximum principal stress demands are investigated for tests on fractured notched round bars, small-scale tension specimens, and a full-scale moment connection. Based on analysis of the tests, it is proposed that, for fractures driven by ductile void growth, triaxiality. Calculations of triaxiality for the connection geometry of the tests are presented. Implications for fracture of steel moment connections are discussed. Limitations of the proposed fracture criterion are also discussed.

As triaxiality increases, the propensity for fracture increases.

Journal of Structural Engineering, 2000, 126(10): 1131-1139

85

TRIAXIALITY AND FRACTURE OF STEEL MOMENT CONNECTIONS

Triaxiality and Fracture of Steel Moment Connections

By B. W. Schafer,[1] Associate Member, ASCE, R. P. Ojdrovic,[2] Member, ASCE, M. S. Zarghamee,[3] Fellow, ASCE

Abstract: The connections of welded steel moment frames undergo a complex multiaxial state of stress that leads to high levels of stress triaxiality. As triaxiality increases, the propensity for fracture increases. Classic engineering models of fracture and modern microscale models of fracture mechanisms explicitly consider the role of triaxiality. Nonetheless, triaxiality is generally not directly considered by structural engineers. In this paper, triaxiality is defined as the ratio of the maximum principal stress to the von Mises stress. Triaxiality and maximum principal stress demands are investigated for tests on fractured notched round bars, small-scale tension

Classic engineering models of fracture and modern microscale models of fracture mechanisms explicitly consider the role of triaxiality.

86

TRIAXIALITY AND FRACTURE OF STEEL MOMENT CONNECTIONS

Triaxiality and Fracture of Steel Moment Connections

By B. W. Schafer,[1] Associate Member, ASCE, R. P. Ojdrovic,[2] Member, ASCE, M. S. Zarghamee,[3] Fellow, ASCE

Abstract: The connections of welded steel moment frames undergo a complex multiaxial state of stress that leads to high levels of stress triaxiality. As triaxiality increases, the propensity for fracture increases. Classic engineering models of fracture and modern microscale models of fracture mechanisms explicitly consider the role of triaxiality. Nonetheless, triaxiality is generally not directly considered by structural engineers. In this paper, triaxiality is defined as the ratio of the maximum principal stress to the von Mises stress. Triaxiality and maximum principal stress demands are investigated for tests on fractured notched round bars, small-scale tension specimens, and a full scale moment connection. Based on analysis of the tests, it is proposed that, for fractures driven by triaxiality, the maximum principal stress at fracture is a function of the level of triaxiality. Cal... connection geo... ded steel mo... t fracture of t... are used.

Nonetheless, triaxiality is generally not directly considered by structural engineers.

Journal of Structural Engineering, 2000, 126(10): 1131-1139

87

TRIAXIALITY AND FRACTURE OF STEEL MOMENT CONNECTIONS

FRACTURE AND TRIAXIALITY

Historical Role of Triaxiality in Engineering Behavior of Materials

Gensamer (1941) provided a classical model to explain the role of triaxiality on the observed differences between macroscale brittle and ductile behavior (Fig. 3). A given state of stress (e.g., pure tension $\tau_{max} = 1/2\sigma_{max}$) defines the slope of a line in the space. As loading magnitude increases, the material follows this line and eventually reaches a critical value of τ_{max}, indicating yielding, or a critical value of σ_{max}, indicating fracture. A new state of stress with a lower slope (lower τ_{max}/σ_{max}) has a higher propensity for fracture. The inverse of the slope (i.e., σ_{max}/τ_{max}) is a measure of triaxiality. Although Gensamer's model (1941) alone does not provide a

88

TRIAXIALITY AND FRACTURE OF STEEL MOMENT CONNECTIONS

Definition of Triaxiality and Triaxiality Measures

Stress triaxiality (hereafter referred to as triaxiality) is often discussed in relation to the existence of tensile stress in the directions other than the primary stress direction. Constraint on a material's ability to flow is an important way to increase triaxiality. In its simplest terms, triaxiality is the ratio of the state of stress a material undergoes to the stress that contributes to yielding. Let us define two definitions for triaxiality (T_1 and T_2) applicable to a ductile metal following von Mises yield criteria:

$$T_1 = \frac{\sigma_{\text{hydrostatic}}}{\sigma_{\text{eff}}} \quad (1)$$

$$T_2 = \frac{\sigma_1}{\sigma_{\text{eff}}} = \frac{\sigma_{\text{max}}}{\sigma_{\text{eff}}} \quad (2)$$

89

TRIAXIALITY AND FRACTURE OF STEEL MOMENT CONNECTIONS

$$T_1 = \frac{\sigma_{\text{hydrostatic}}}{\sigma_{\text{eff}}}$$

$$T_2 = \frac{\sigma_1}{\sigma_{\text{eff}}} = \frac{\sigma_{\text{max}}}{\sigma_{\text{eff}}}$$

$$\sigma_{\text{hydrostatic}} = \frac{\sigma_1 + \sigma_2 + \sigma_3}{3}$$

$$\sigma_{\text{eff}} = \sqrt{\frac{1}{2}}\sqrt{(\sigma_1 - \sigma_2)^2 + (\sigma_2 - \sigma_3)^2 + (\sigma_1 - \sigma_3)^2}$$

90

Ductility: Another View

Outline

- Introduction
- A Wrong View
- A Corrected View

Ductility is function of the testing or service conditions.

91

Ductility: Another View

Outline

- Introduction
- A Wrong View
- A Corrected View
- The View of Physics
- Application of the Correct View

92

Lennard Jones Potential

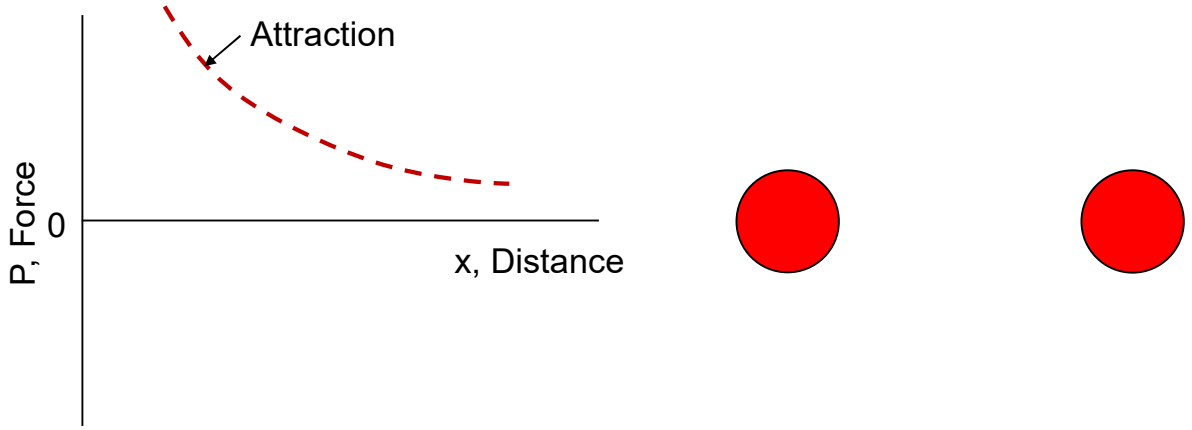

93

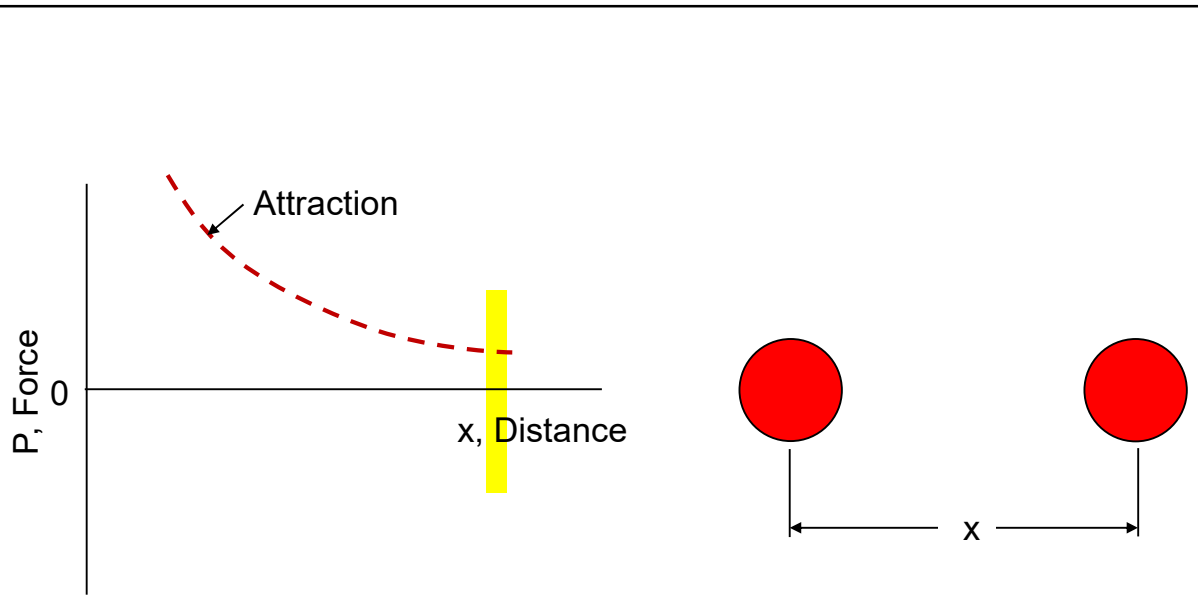

94

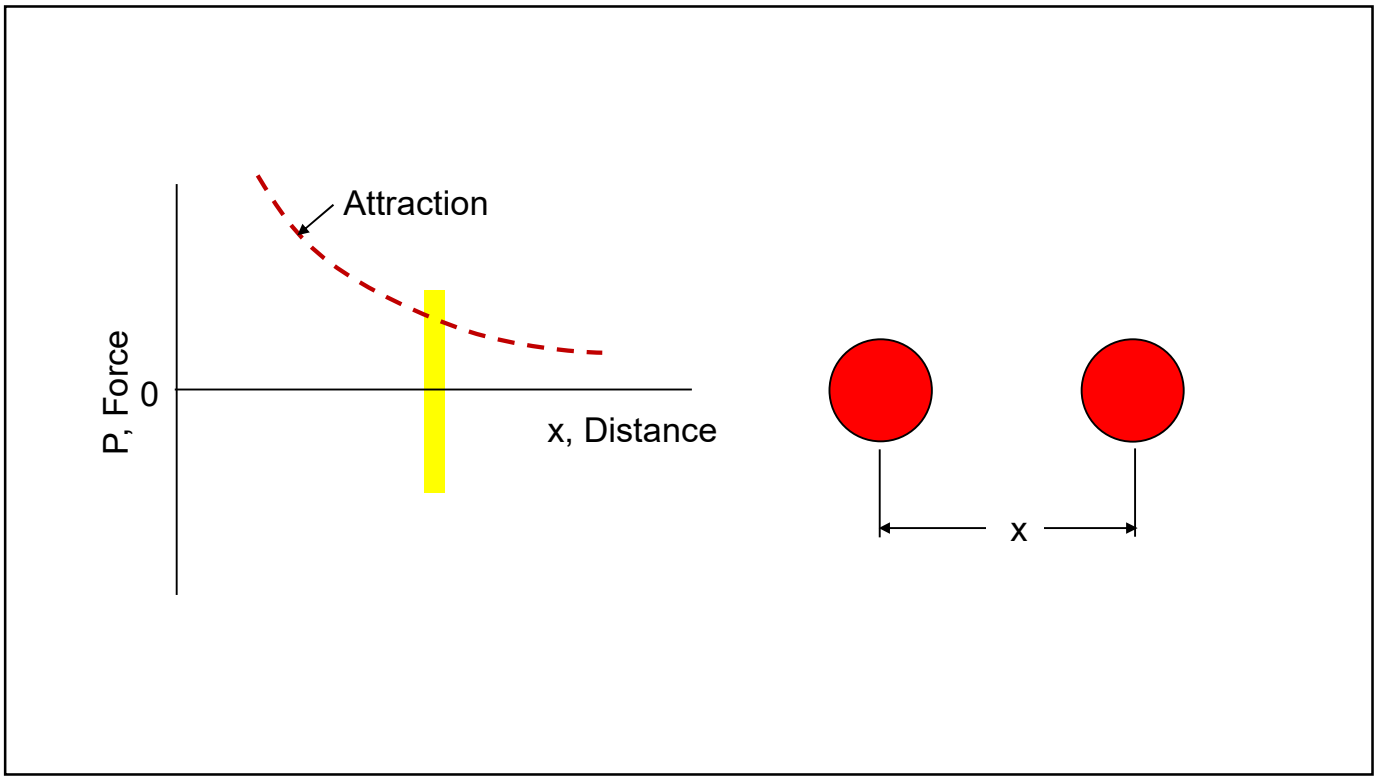
Attraction
P, Force
0
x, Distance
x

95

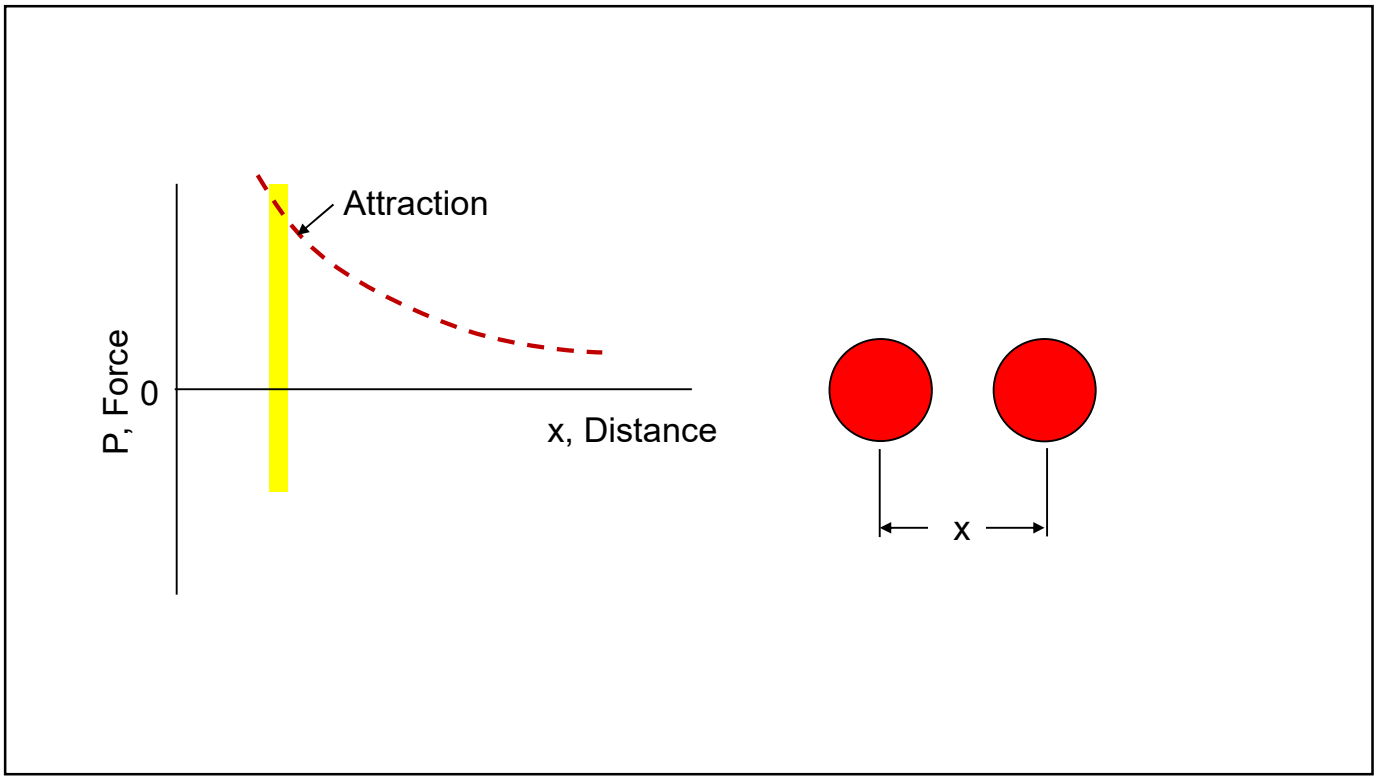
Attraction
P, Force
0
x, Distance
x

96

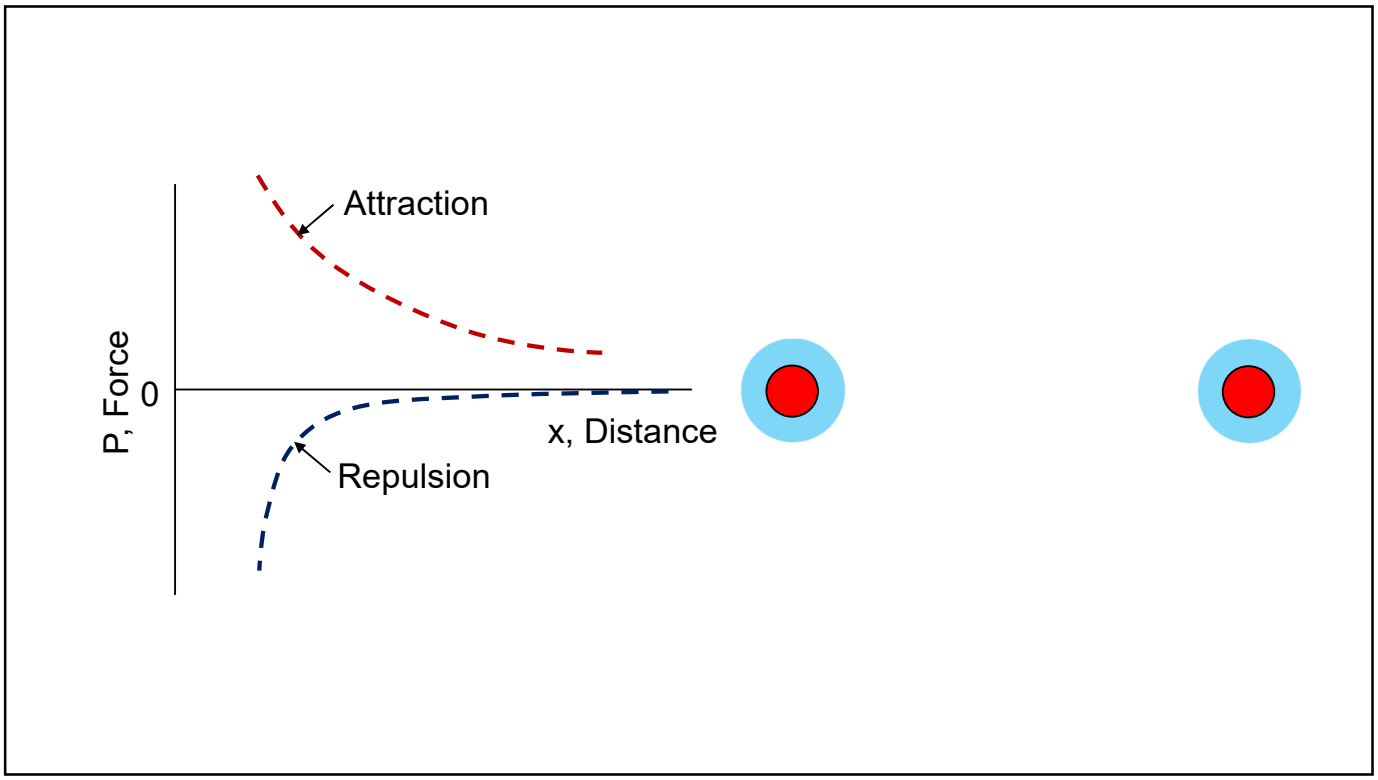
Attraction
P, Force
0
x, Distance
Repulsion

97

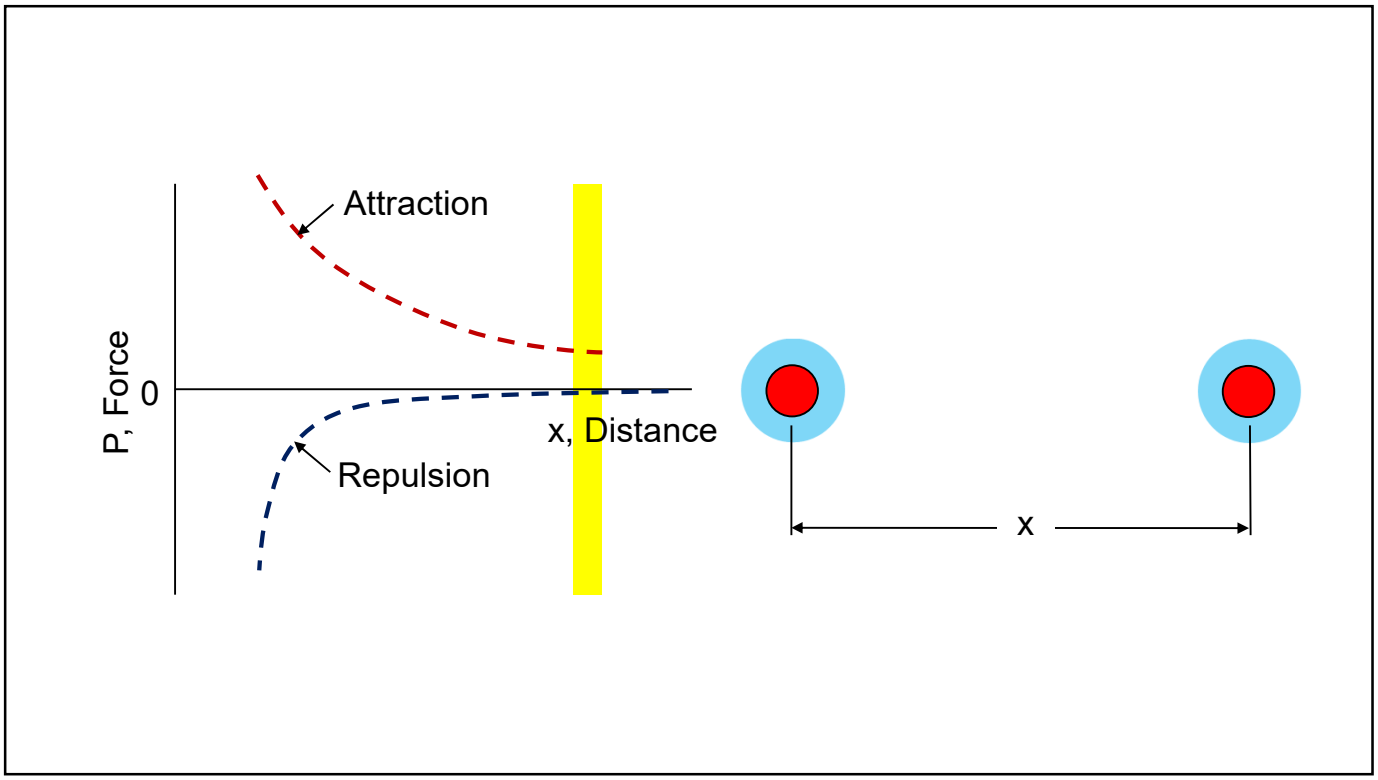
Attraction
P, Force
0
x, Distance
Repulsion
x

98

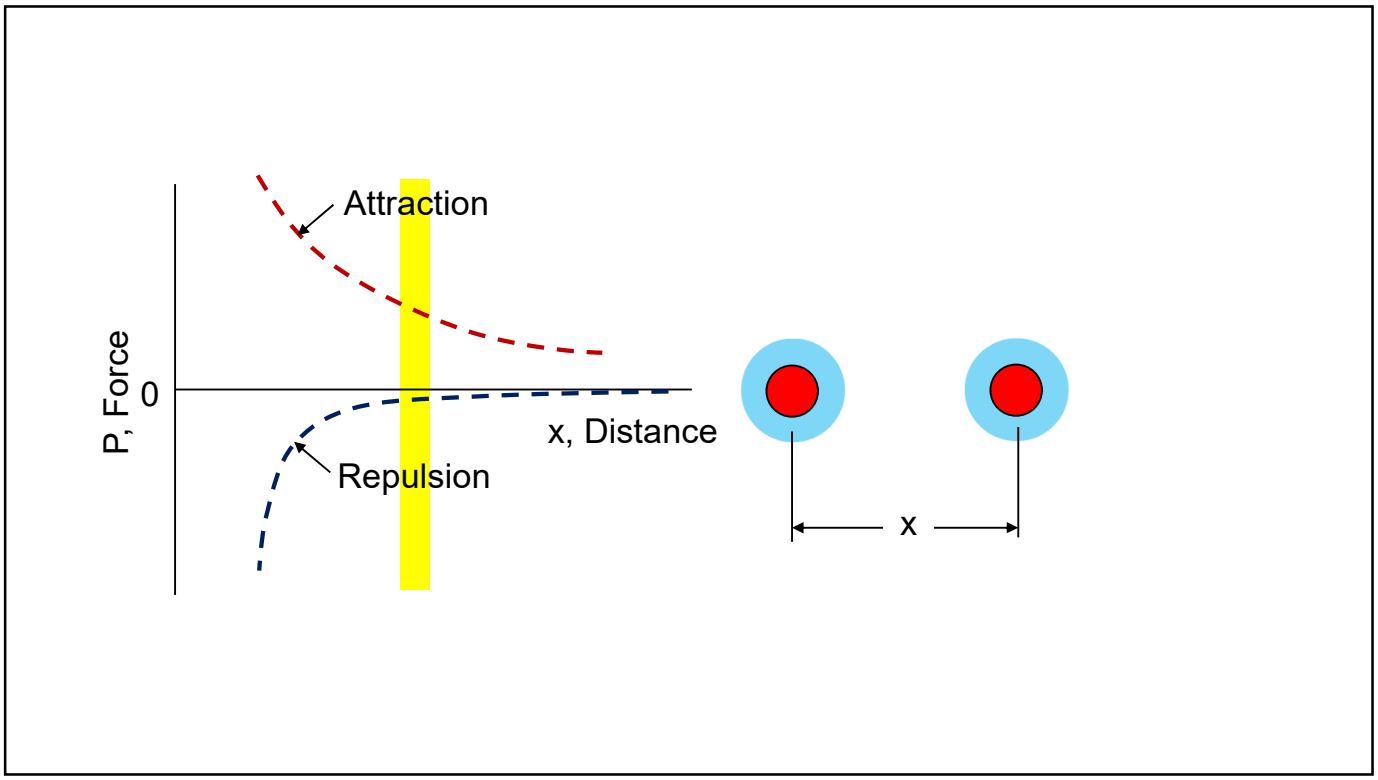
Attraction
P, Force
0
x, Distance
Repulsion
x

99

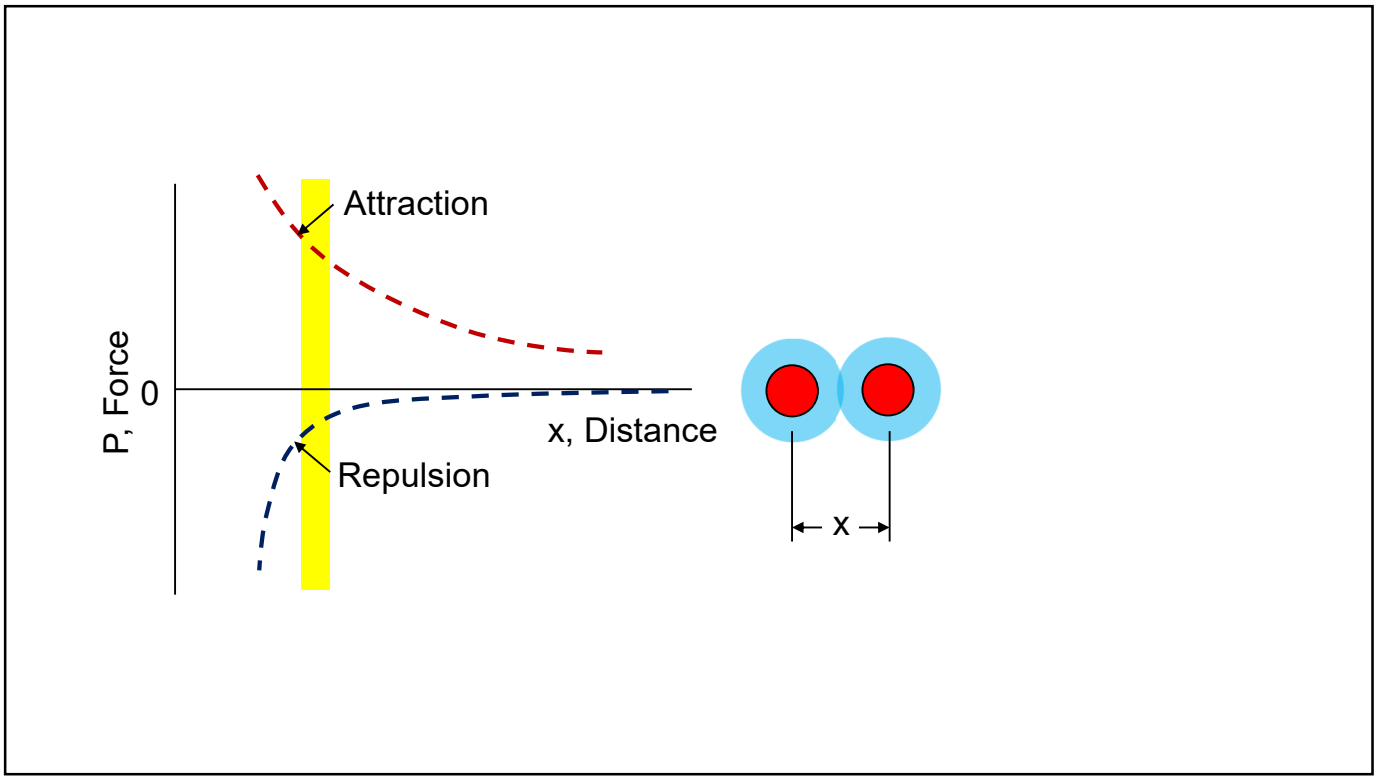
Attraction
P, Force
0
x, Distance
Repulsion
x

100

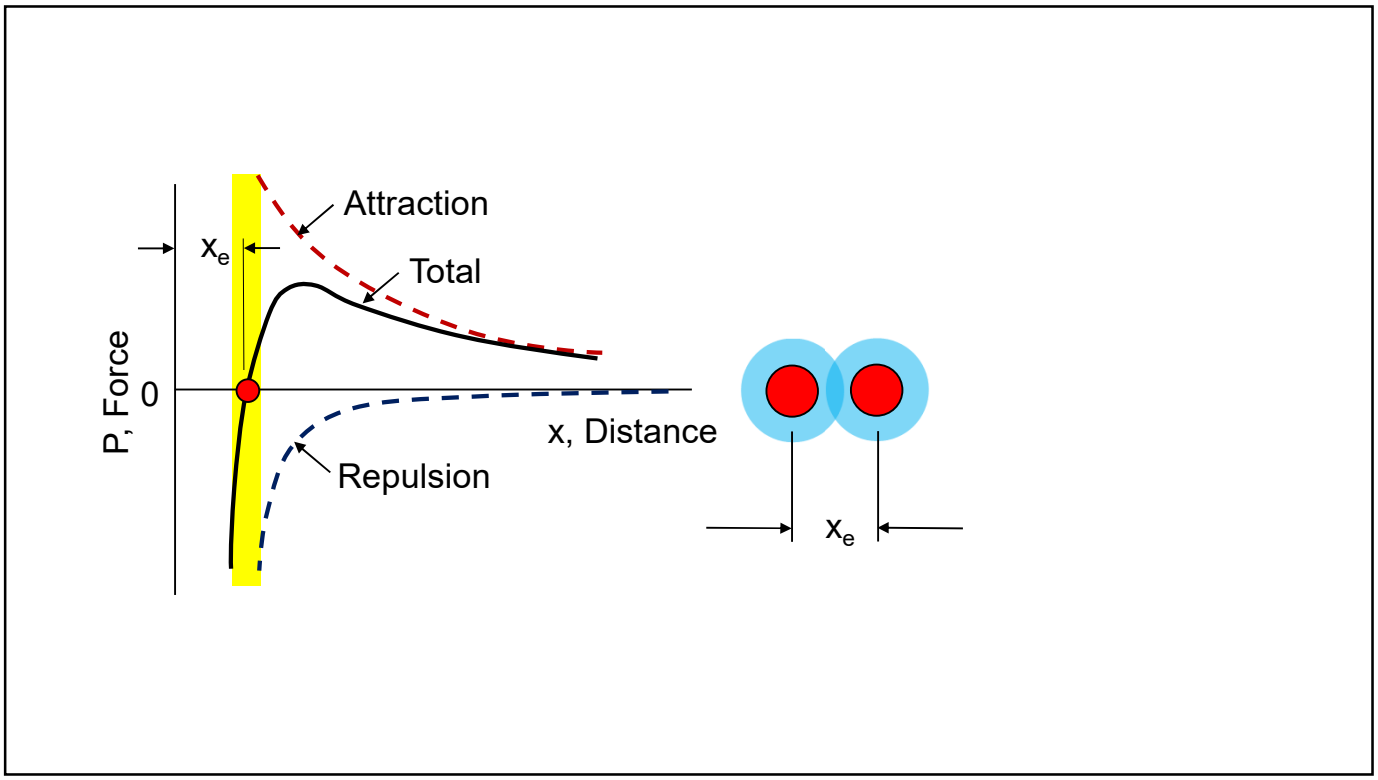
Attraction
x_e
Total
P, Force
0
x, Distance
Repulsion
x_e

101

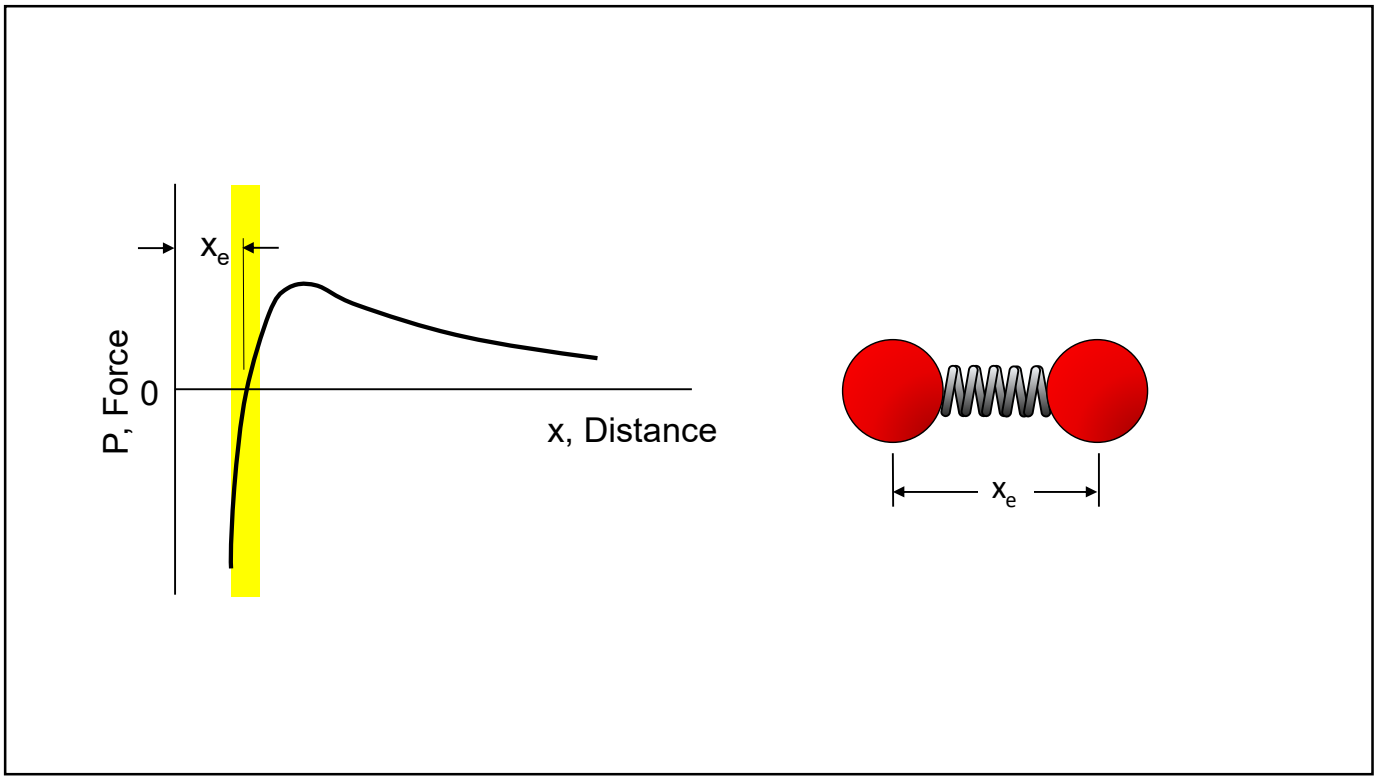
x_e
P, Force
0
x, Distance
x_e

102

Compressive Strength

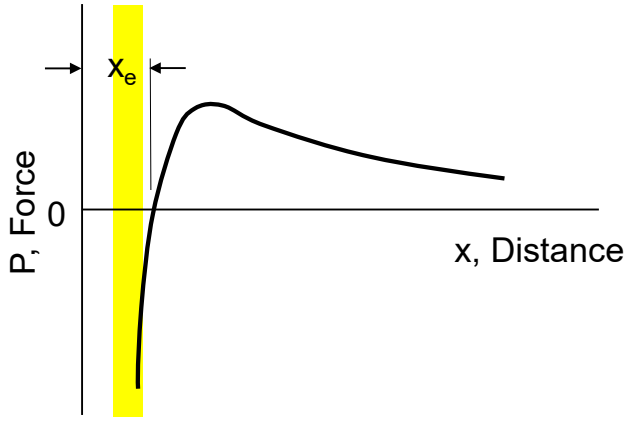

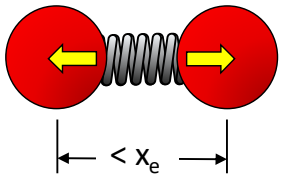

103

Tensile Strength

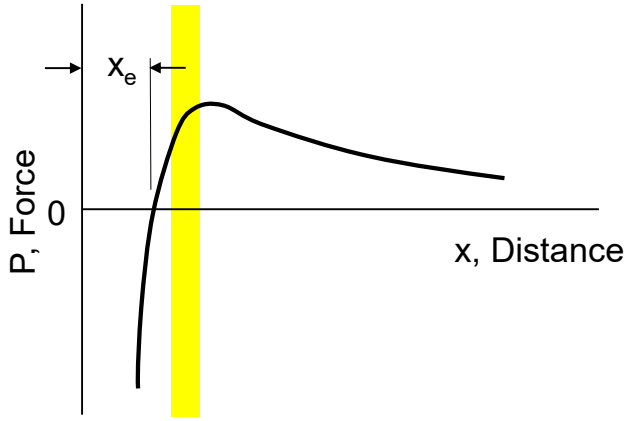

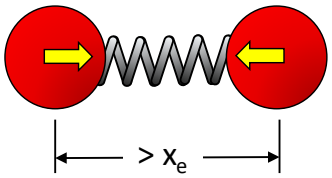

104

Modulus of Elasticity

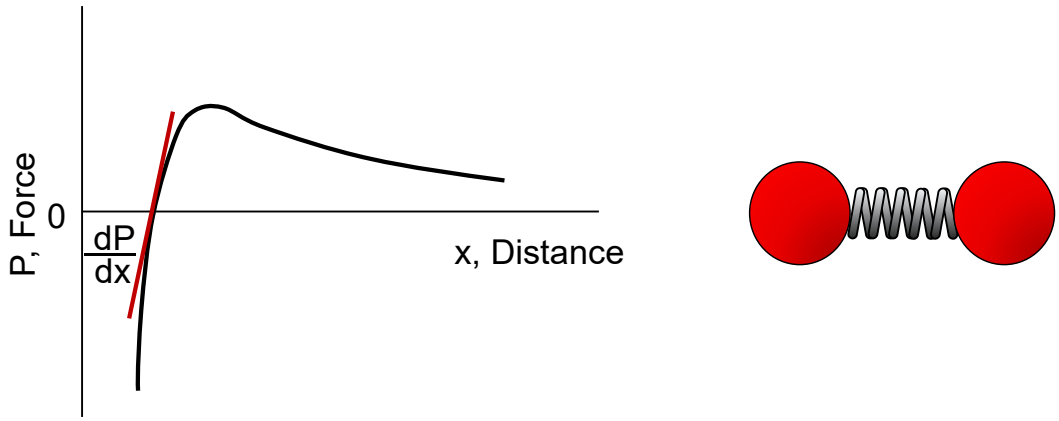

105

Modulus of Elasticity

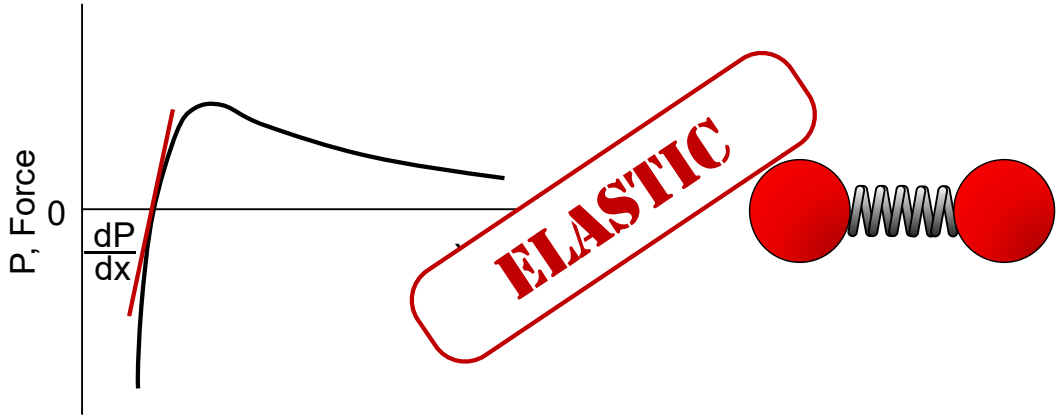

106

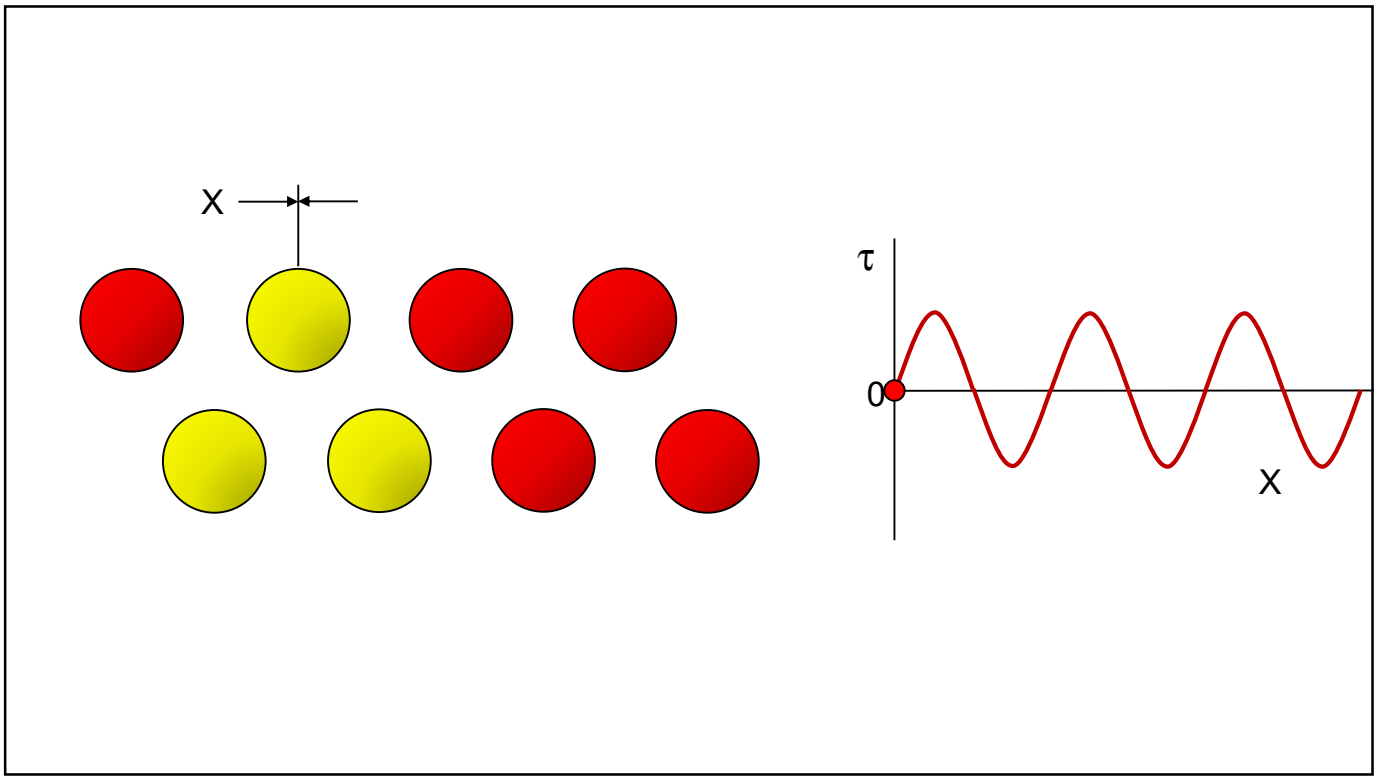

107

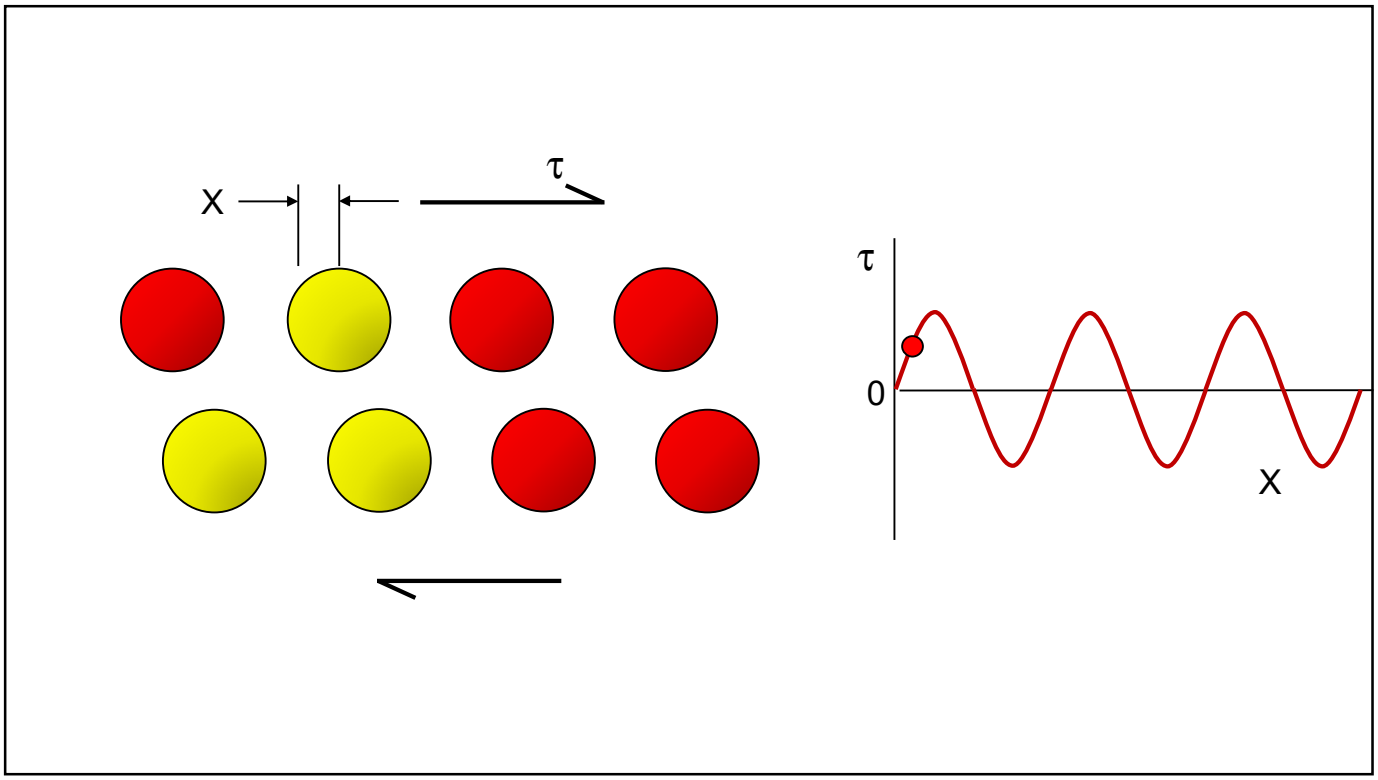

108

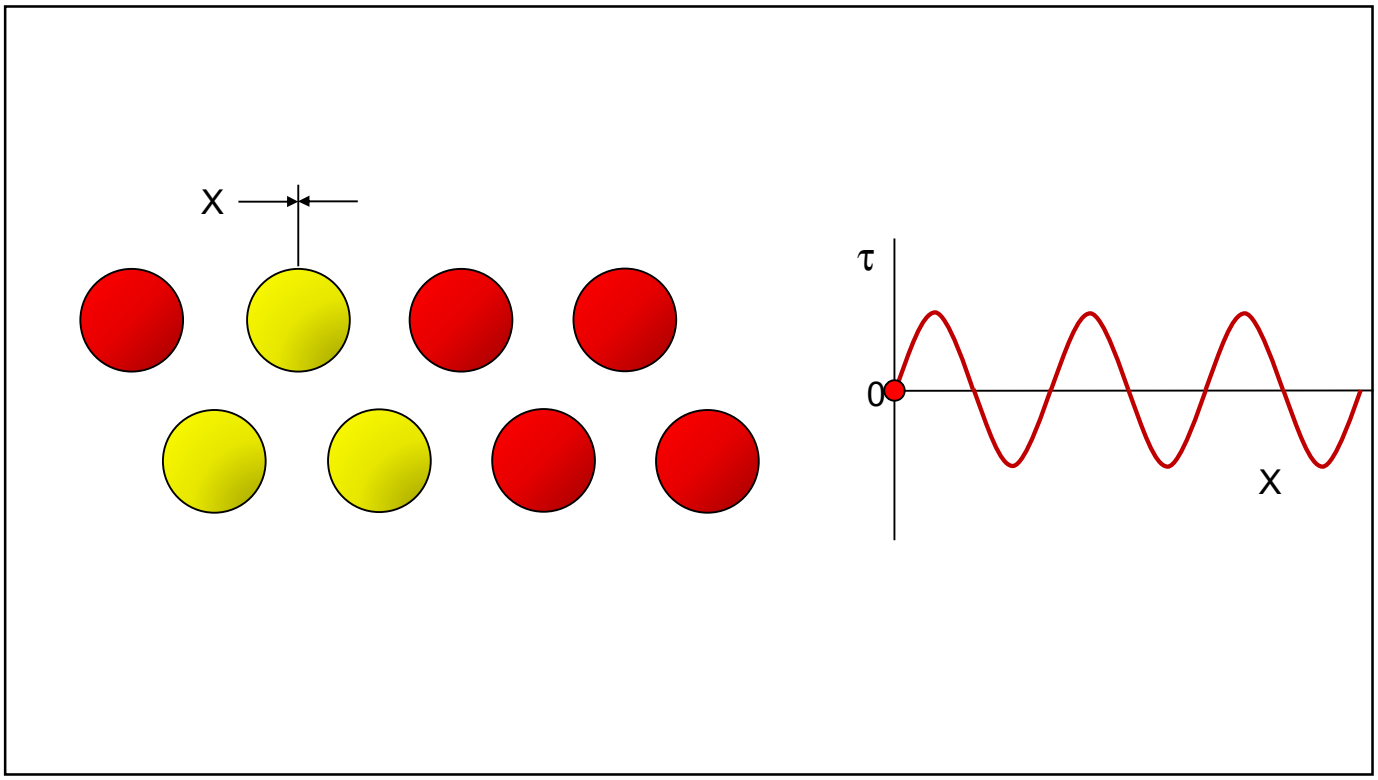

109

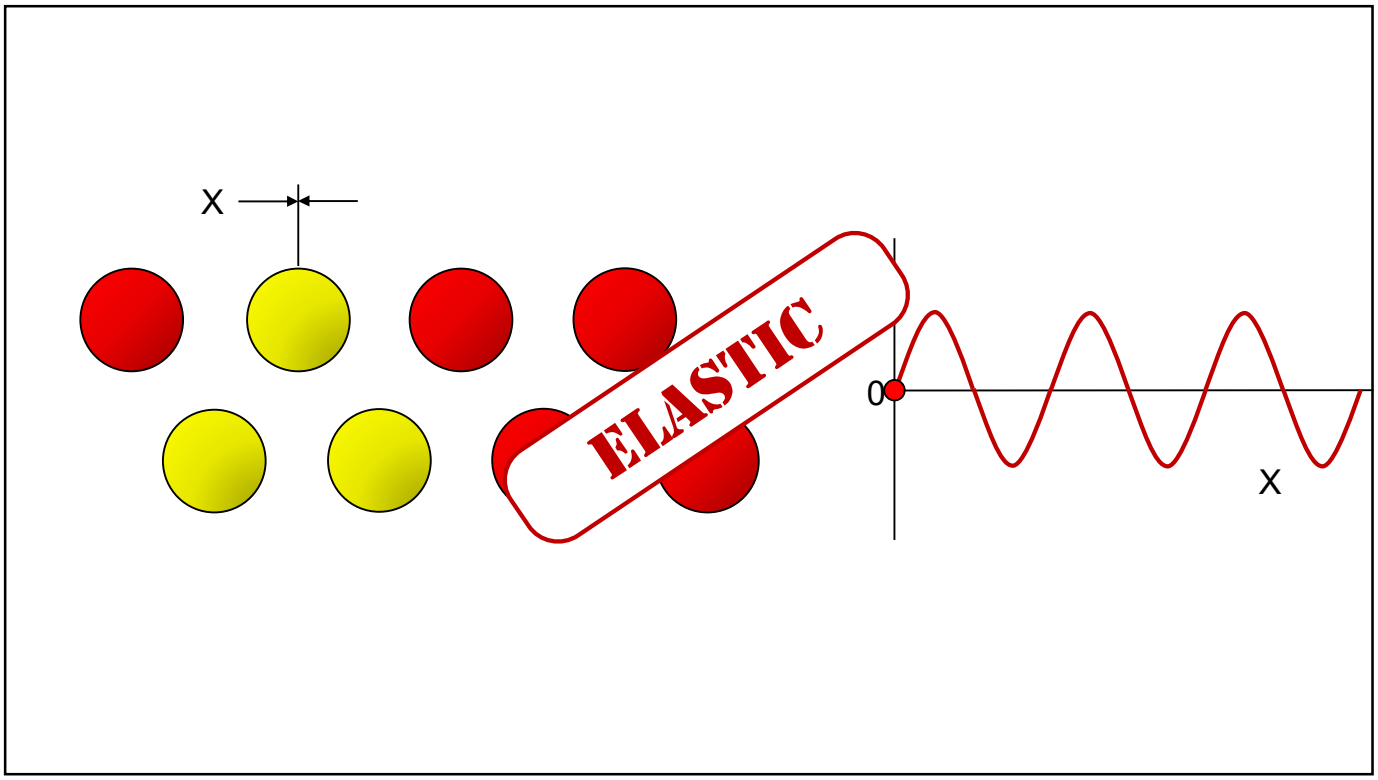

110

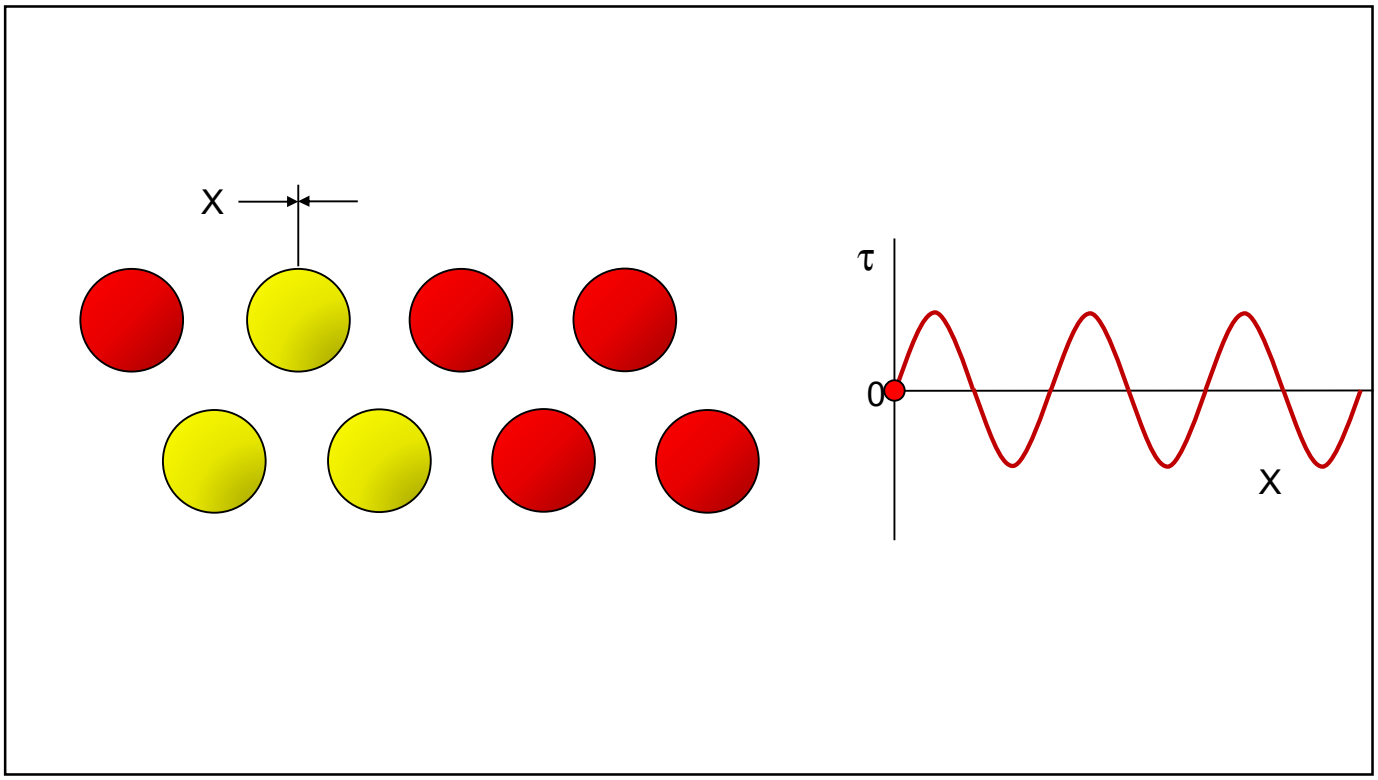

111

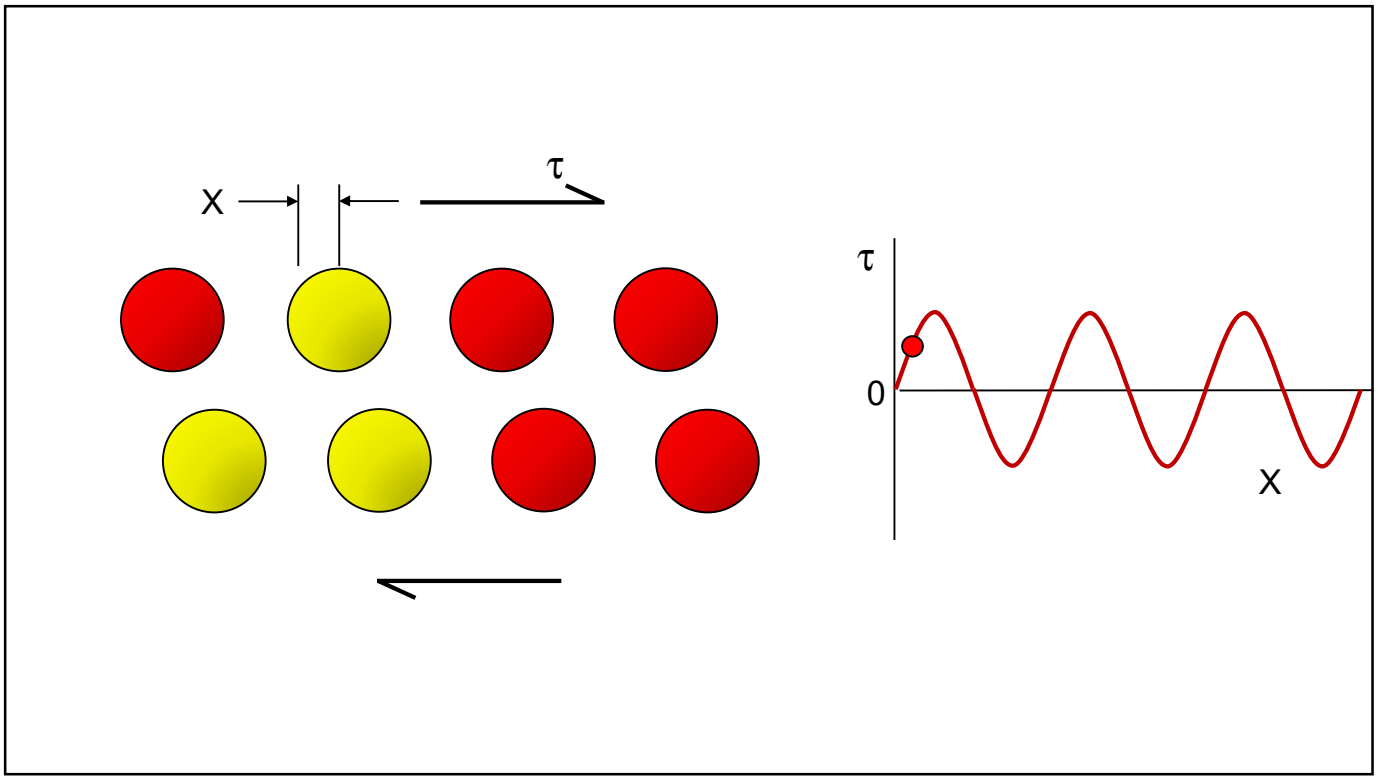

112

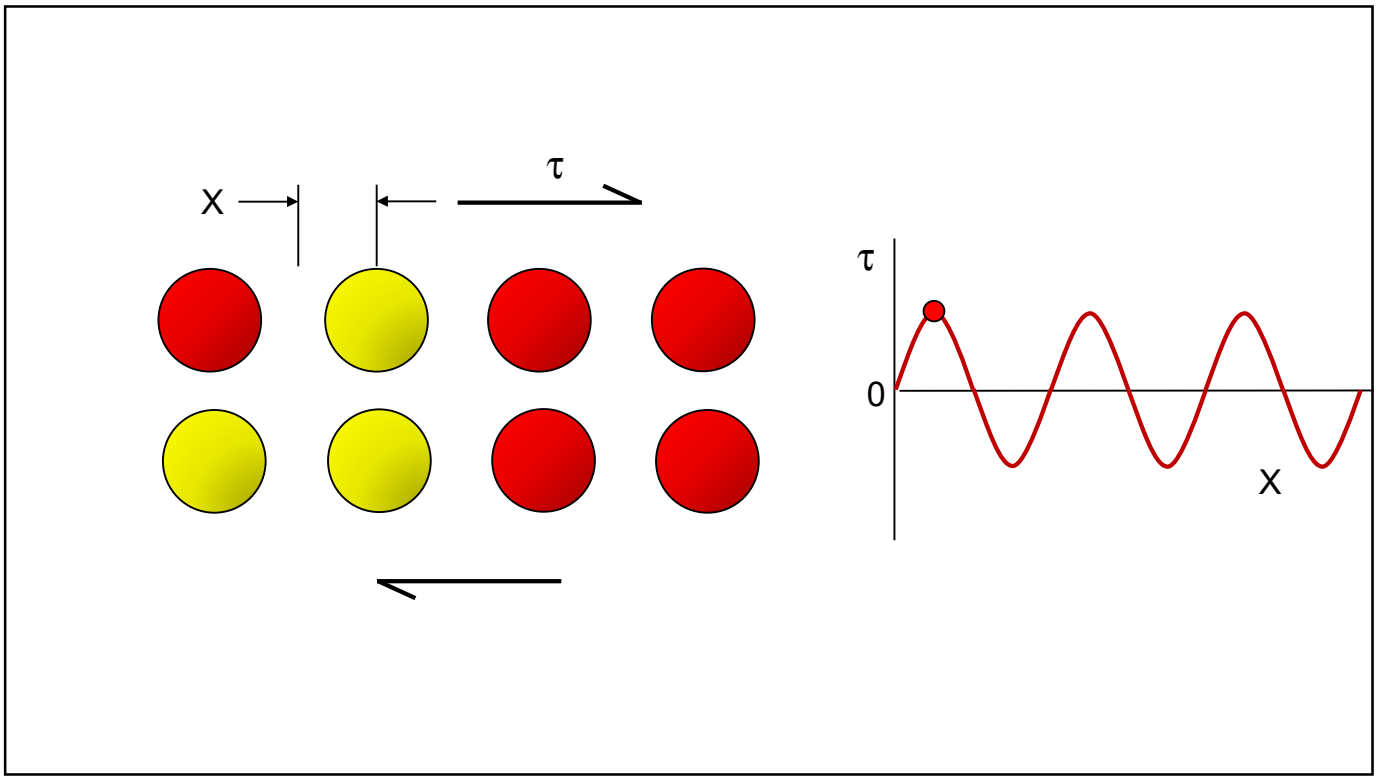

113

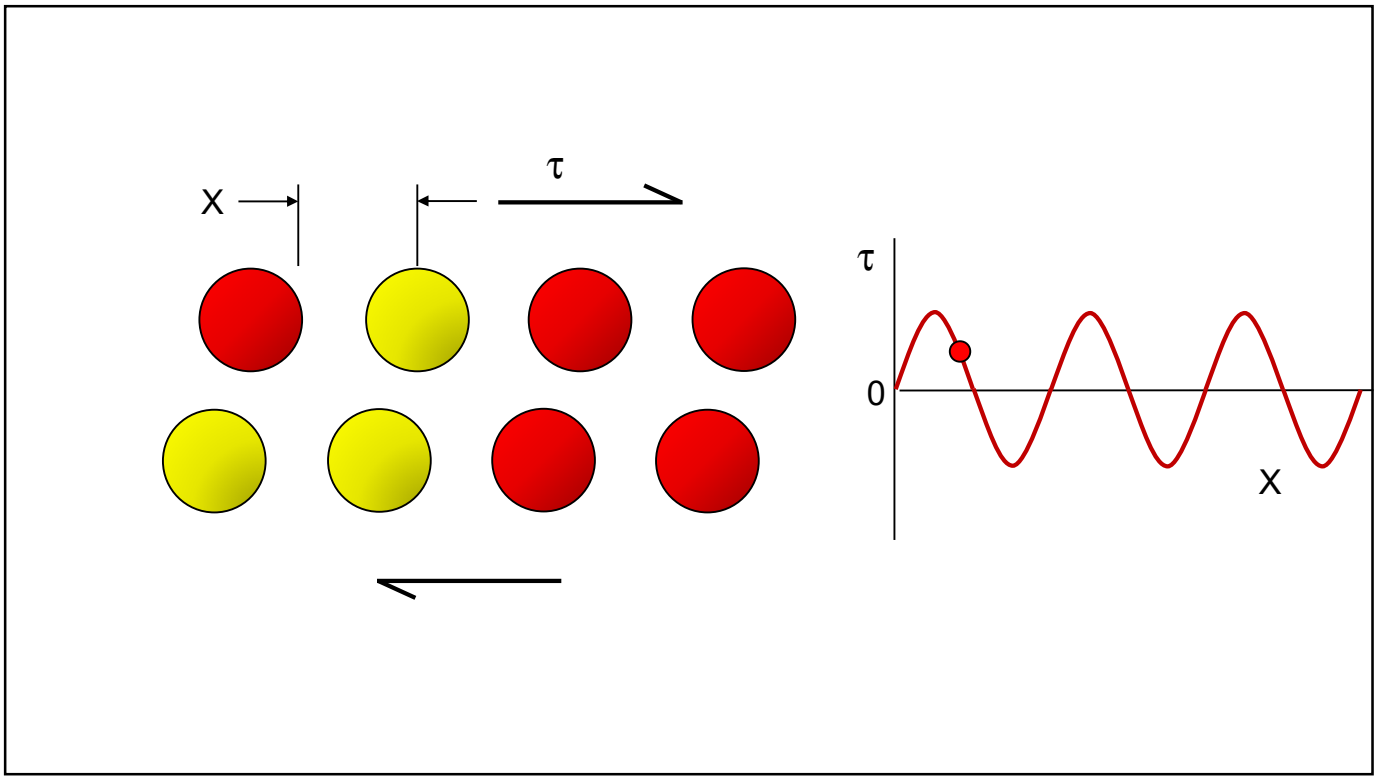

114

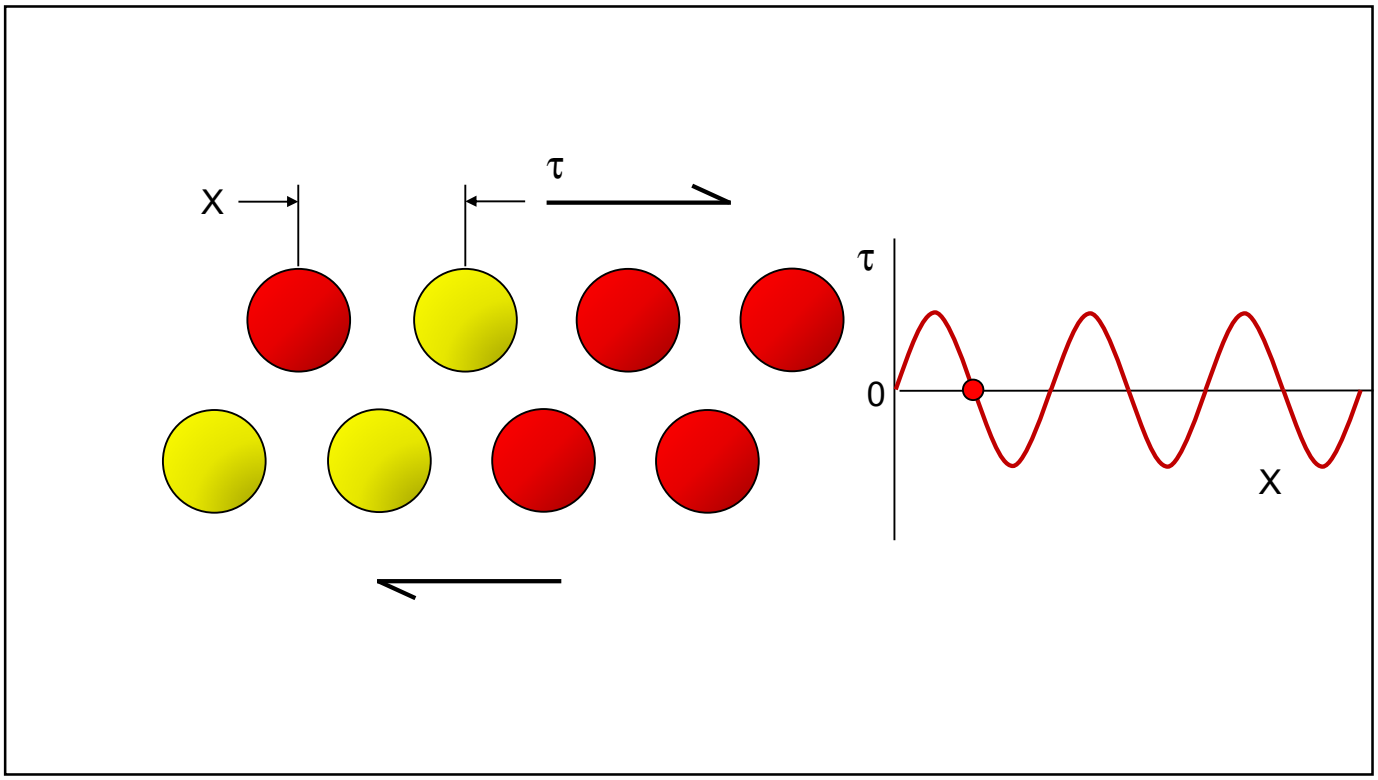

115

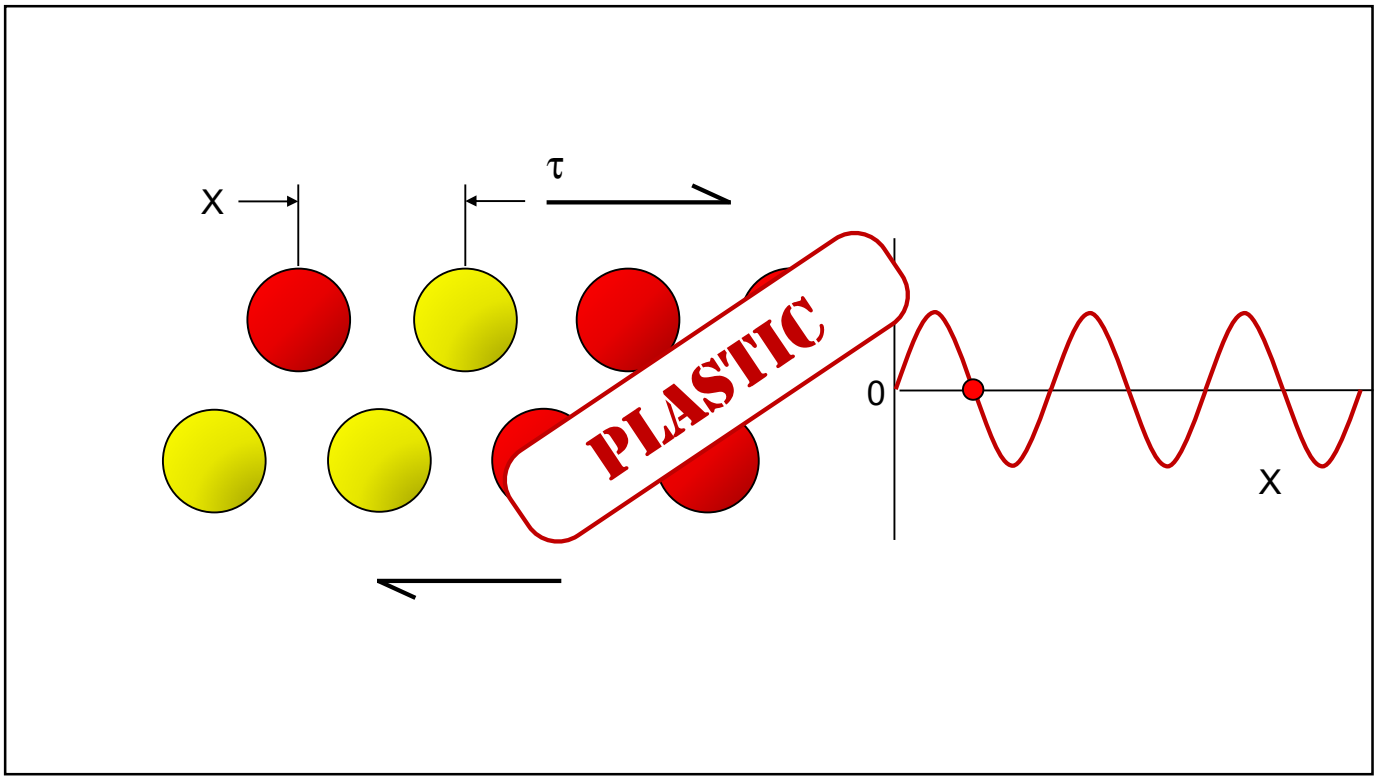

116

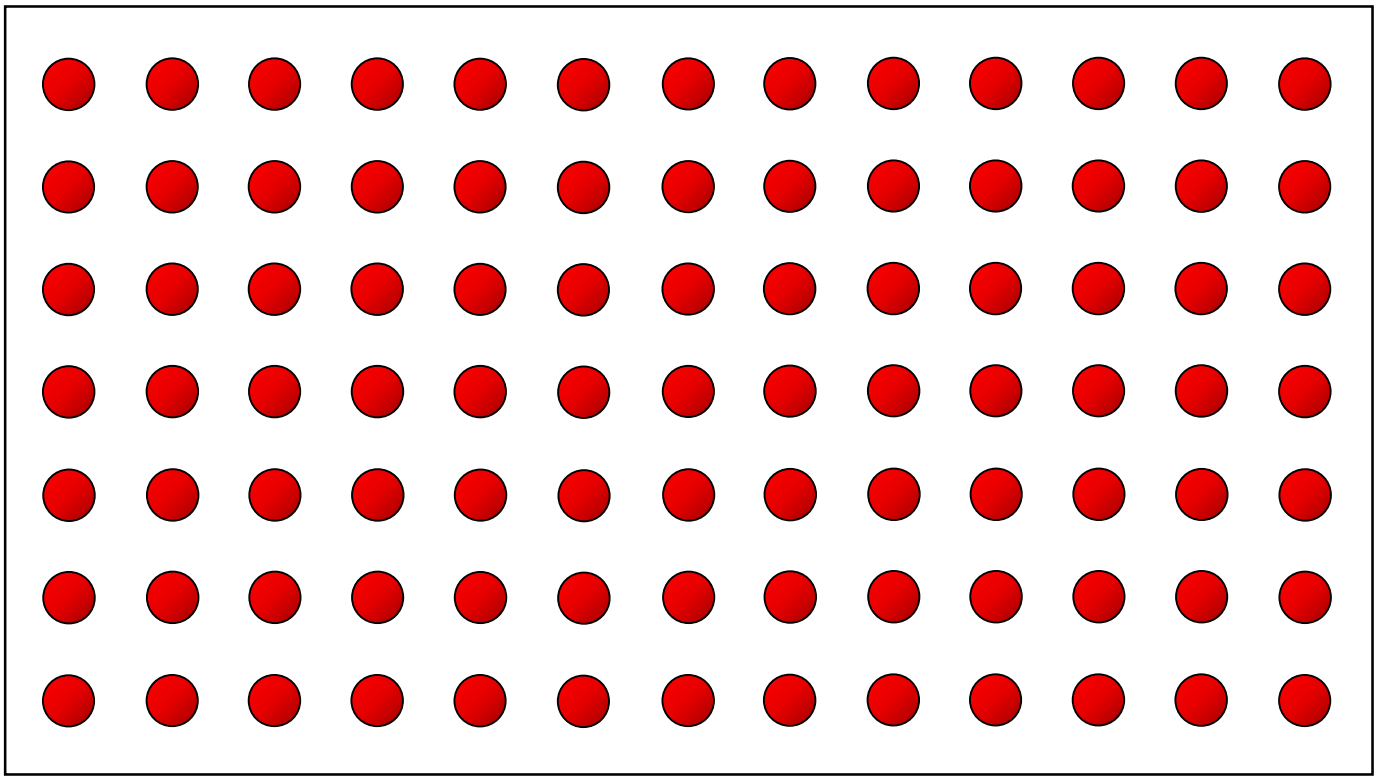

117

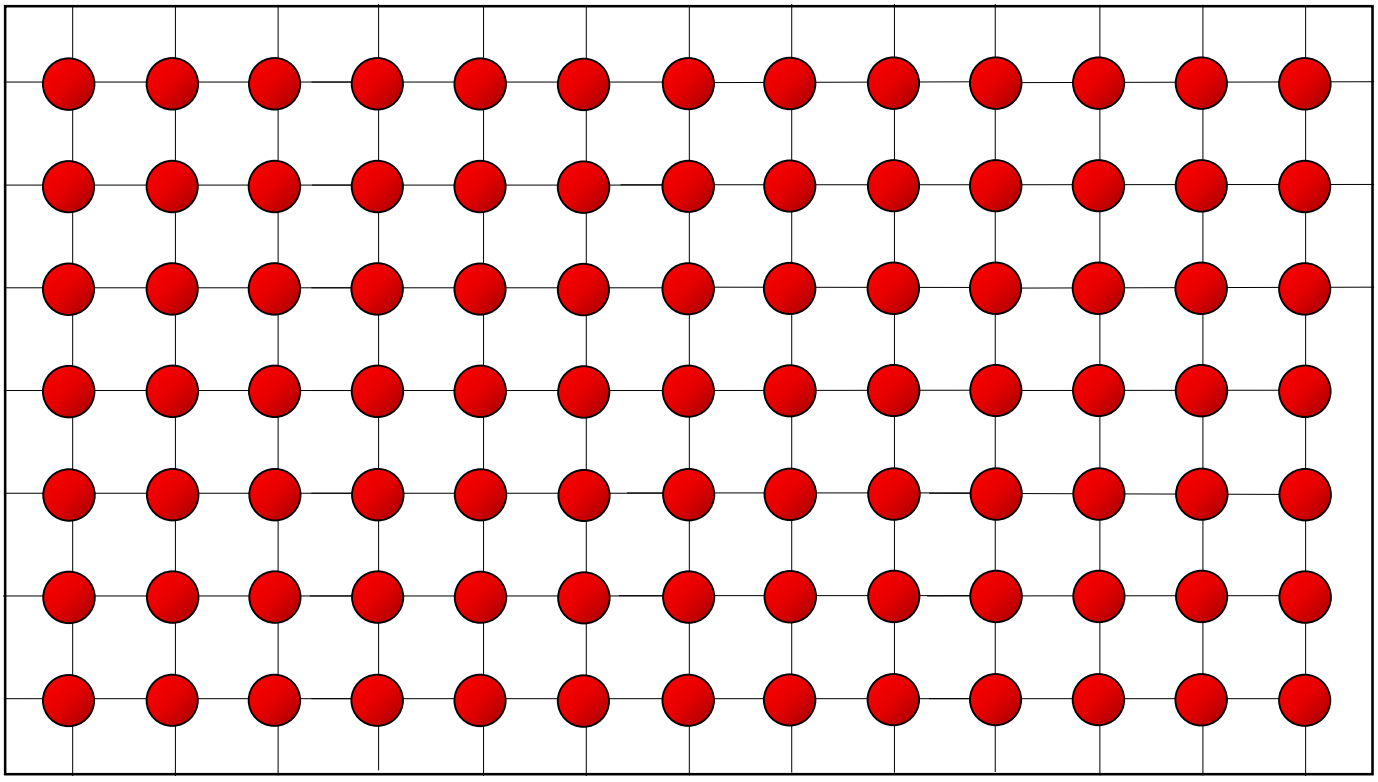

118

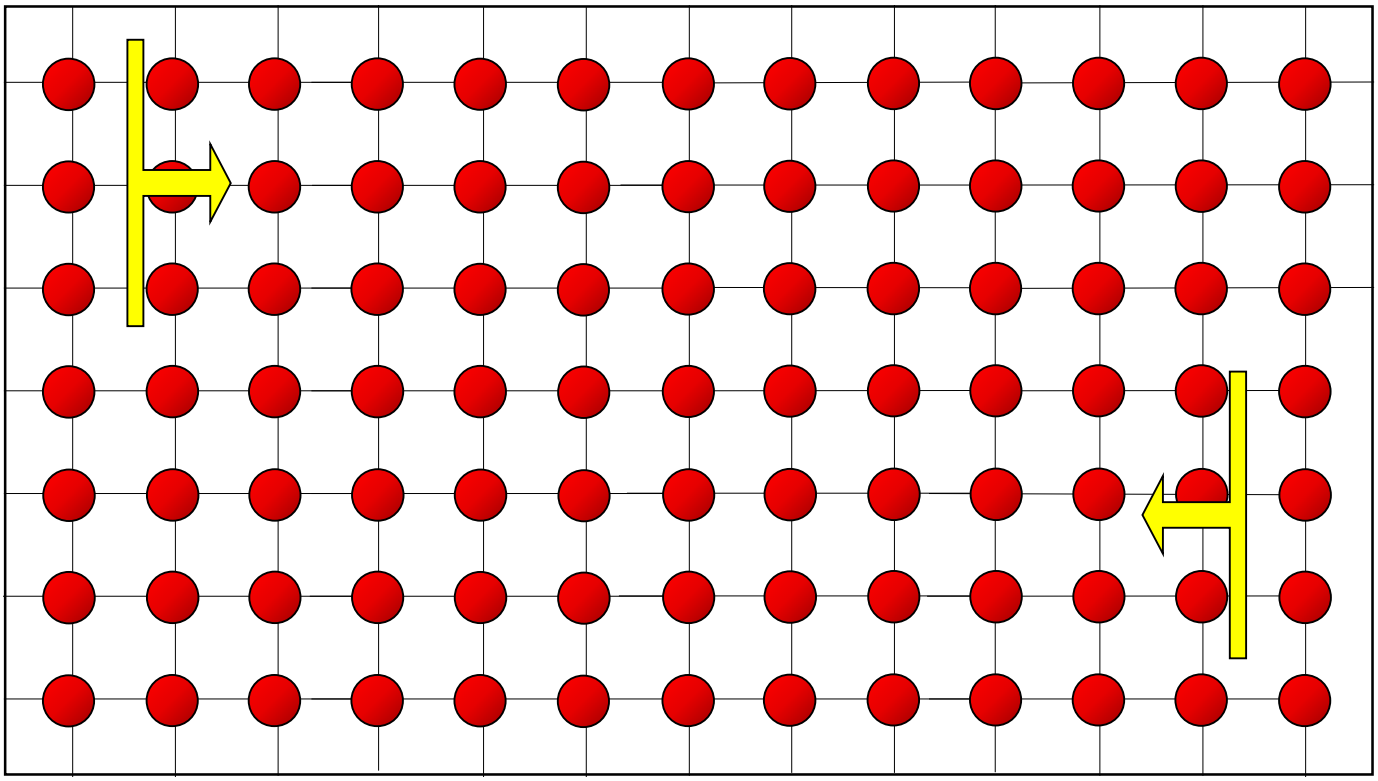

119

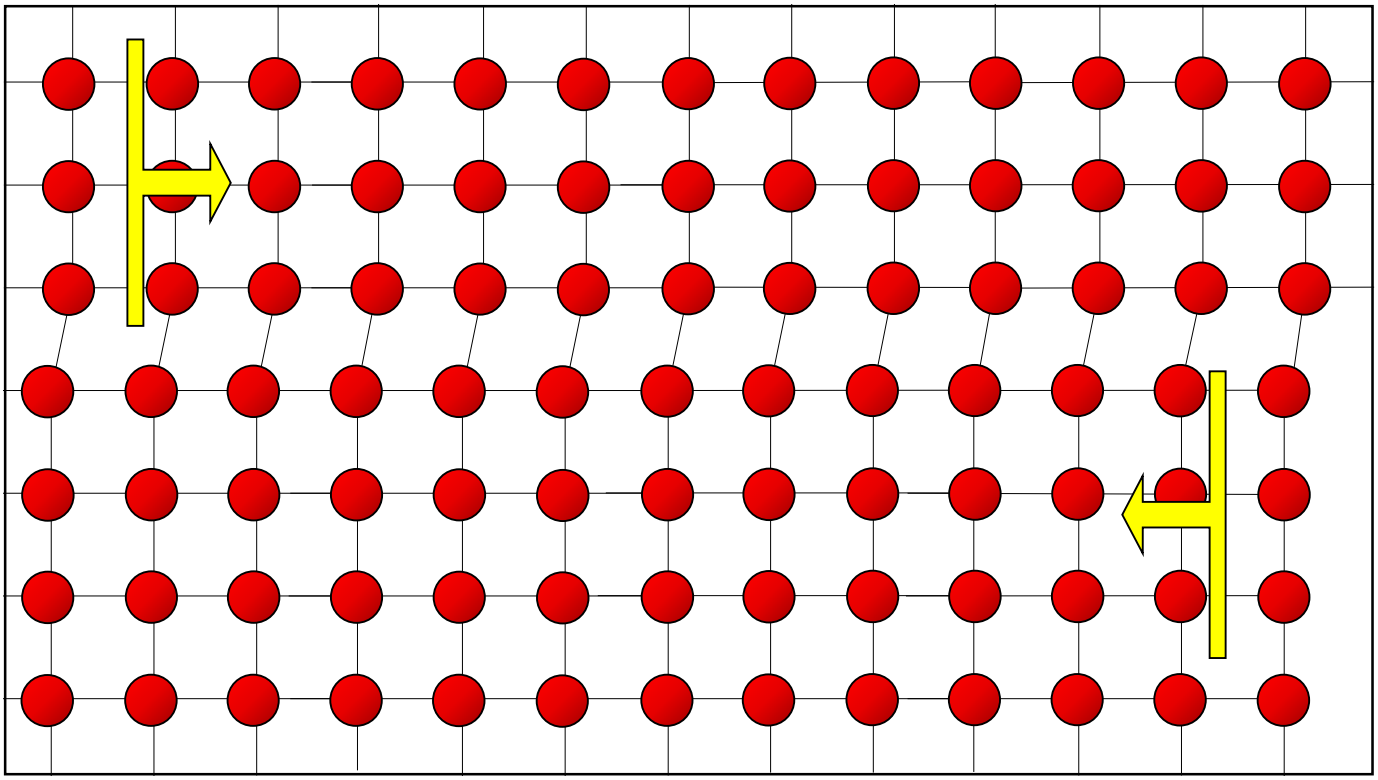

120

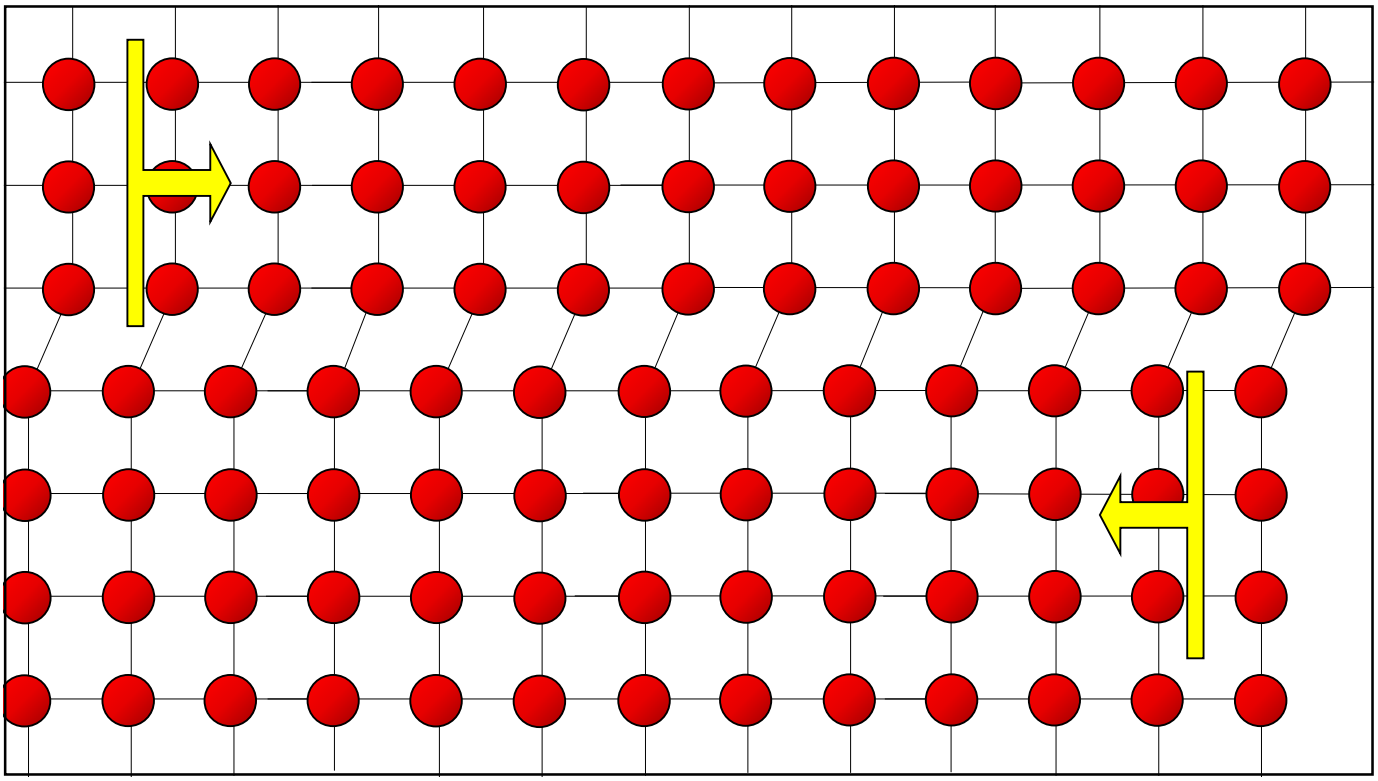

121

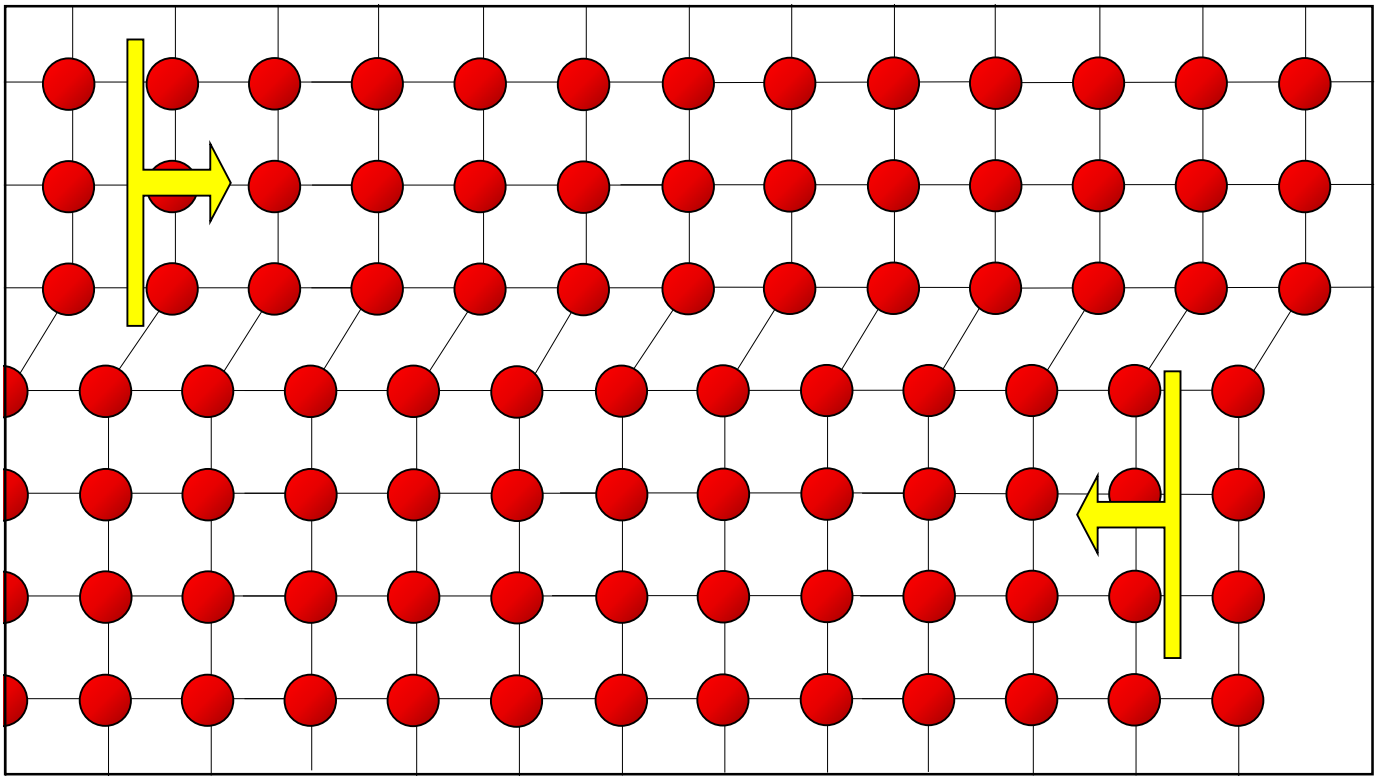

122

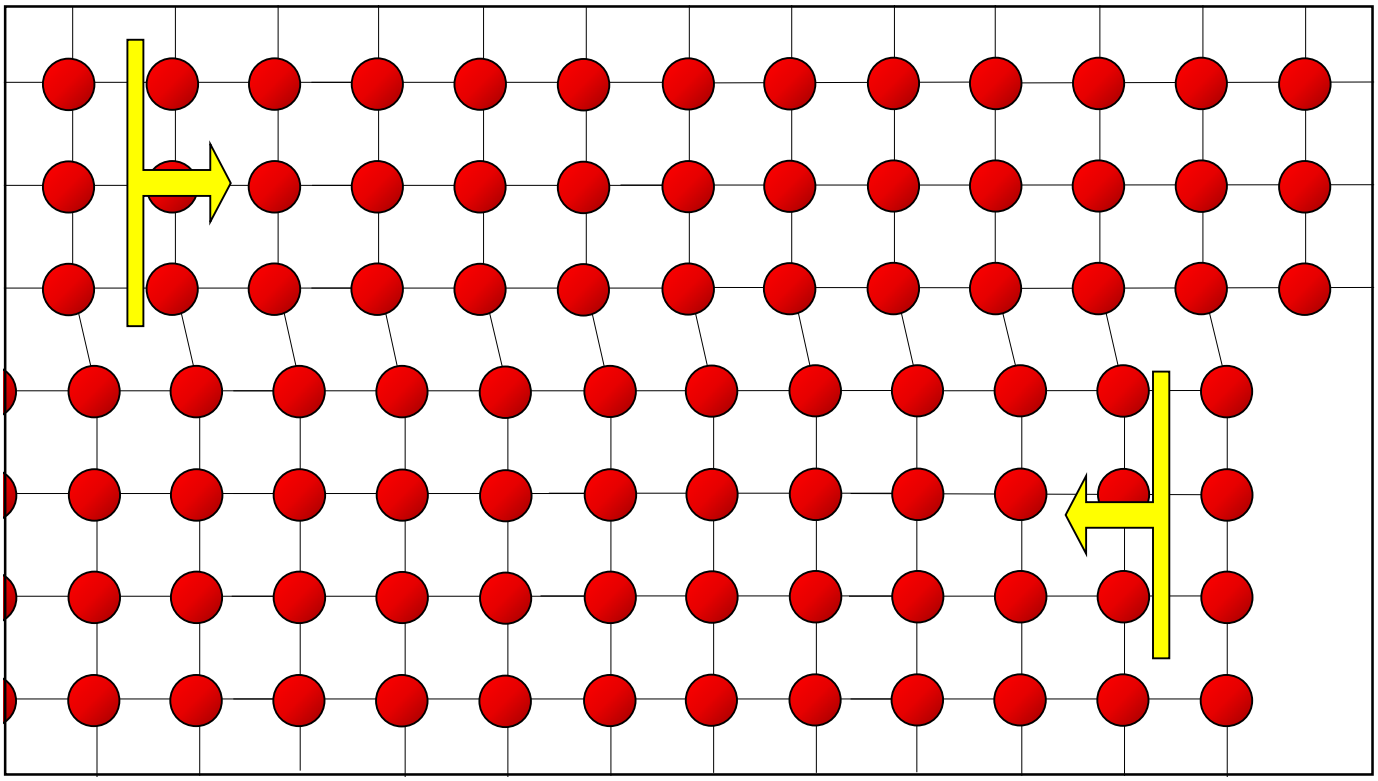

123

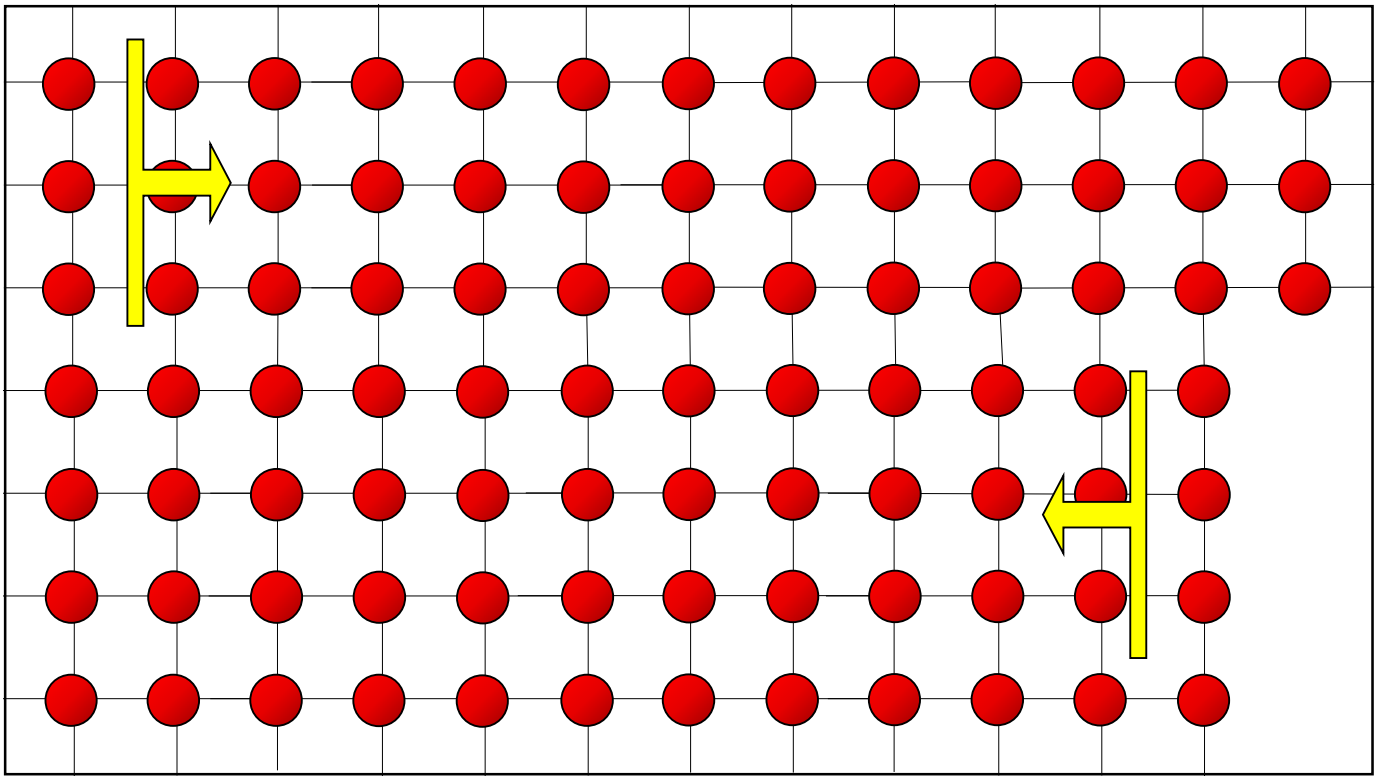

124

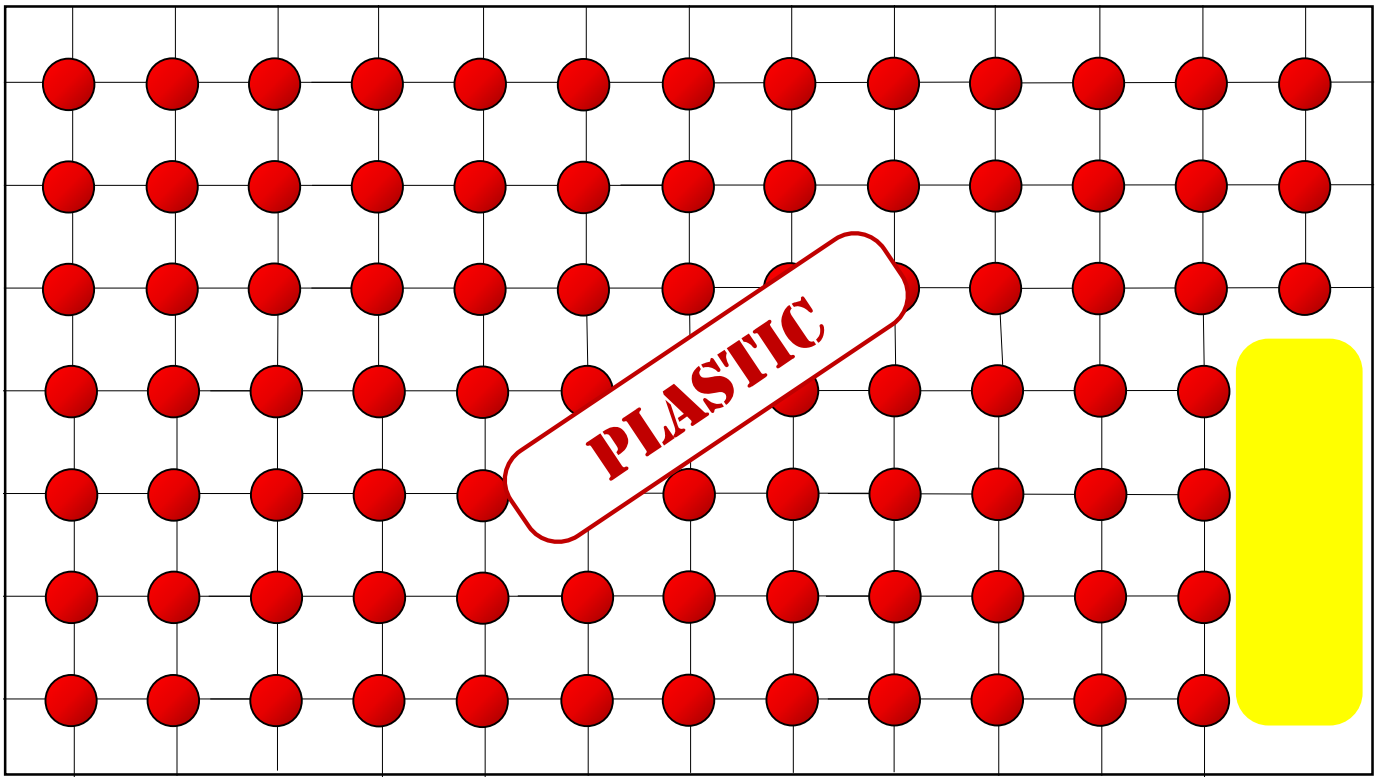

125

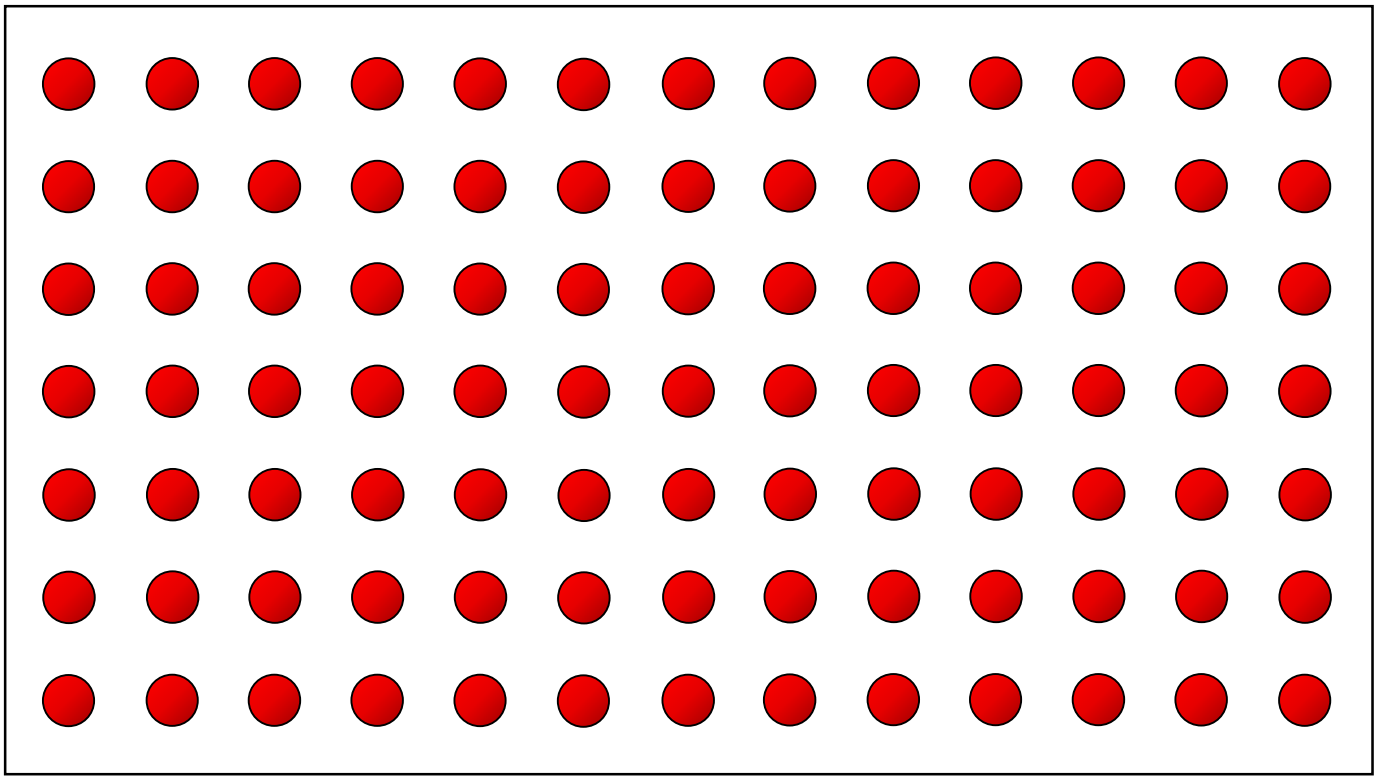

126

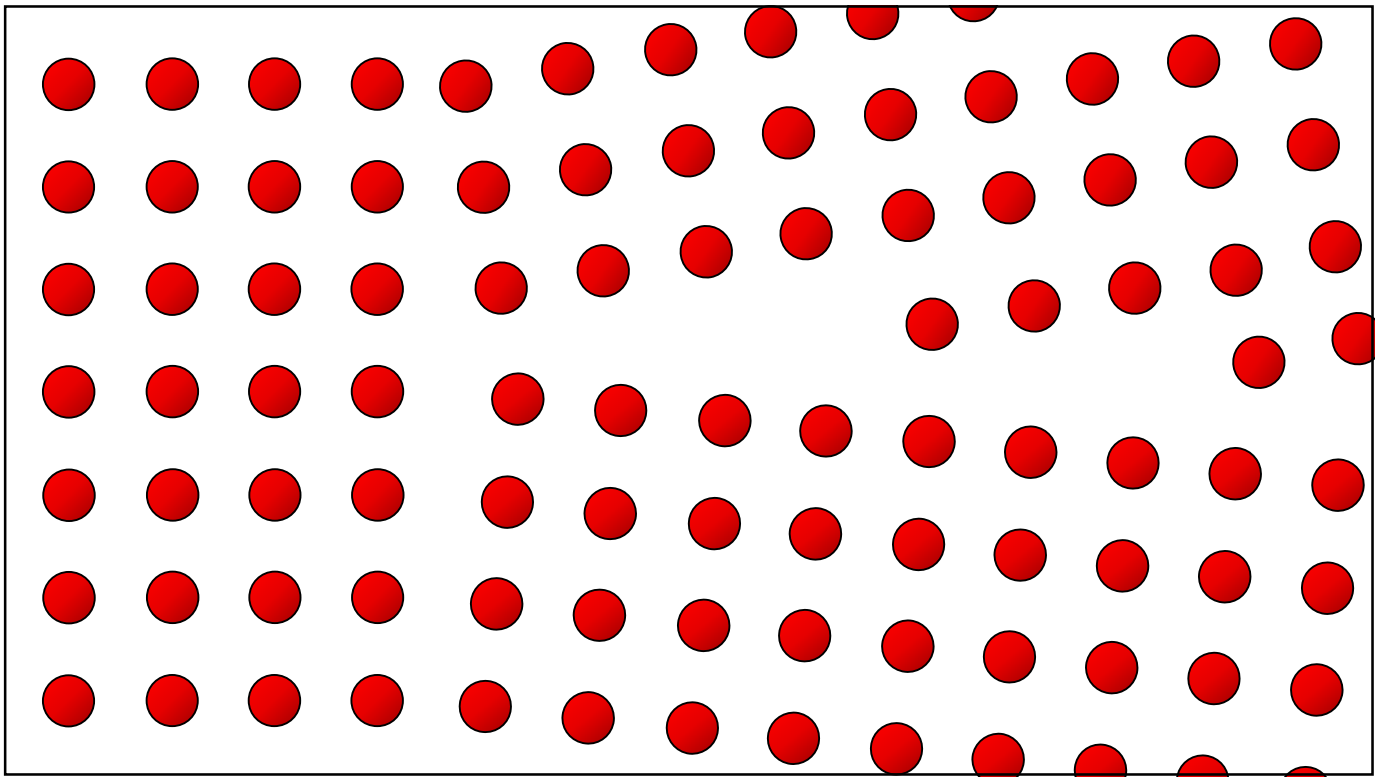

127

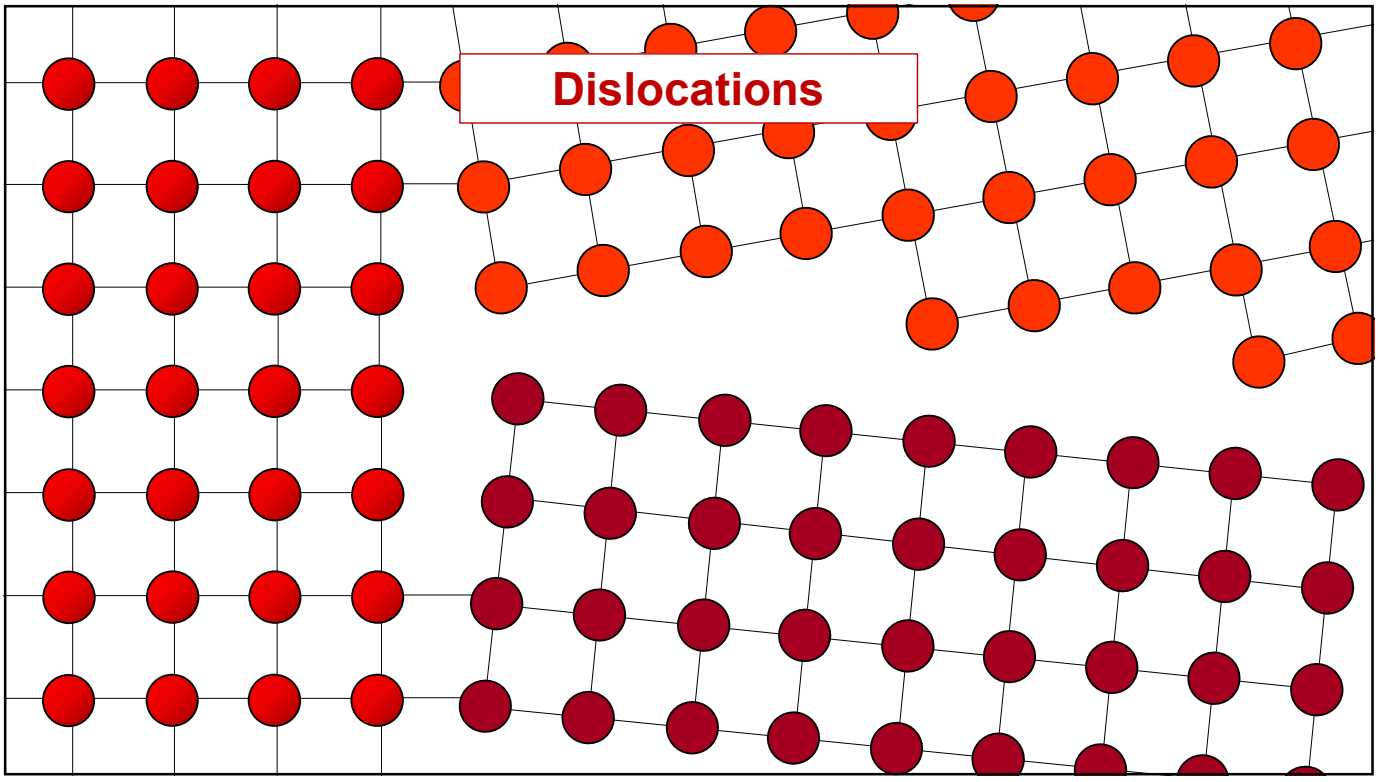

128

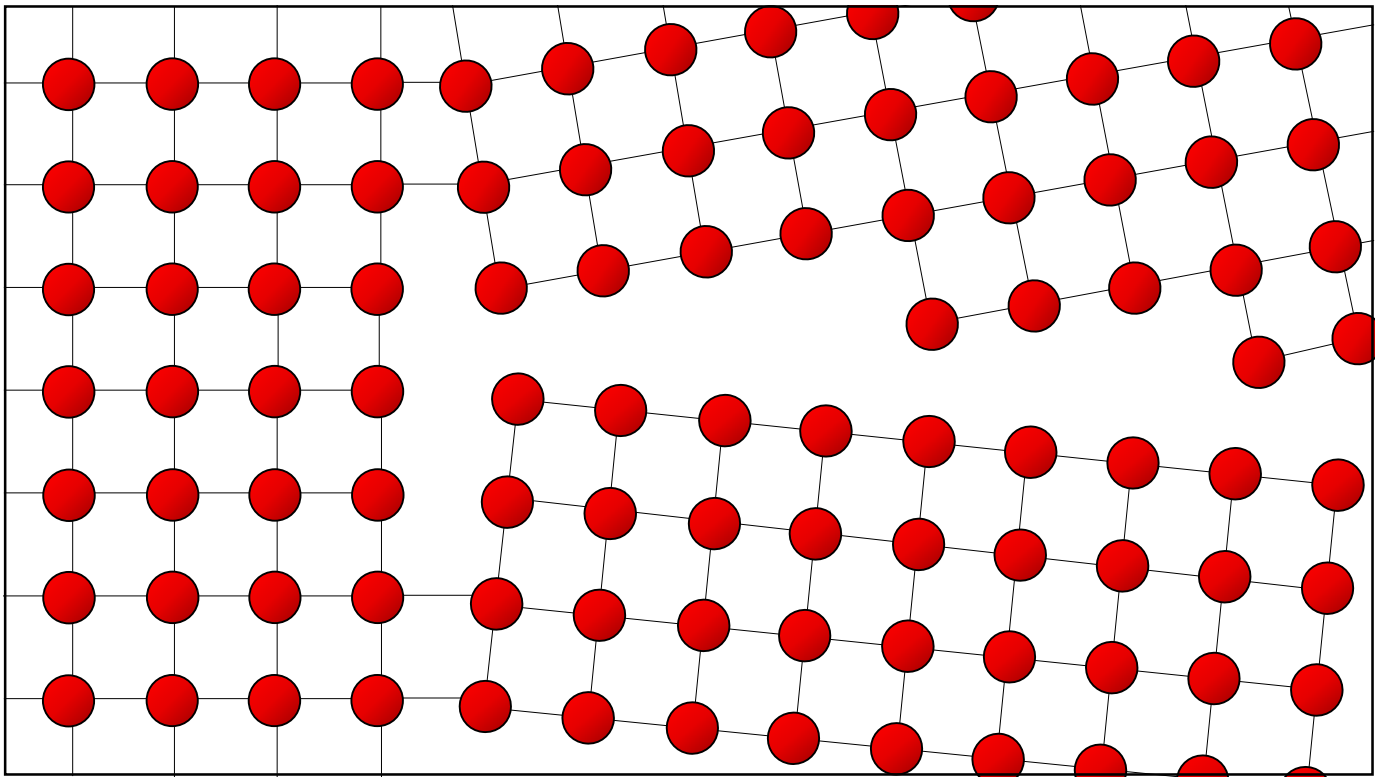

129

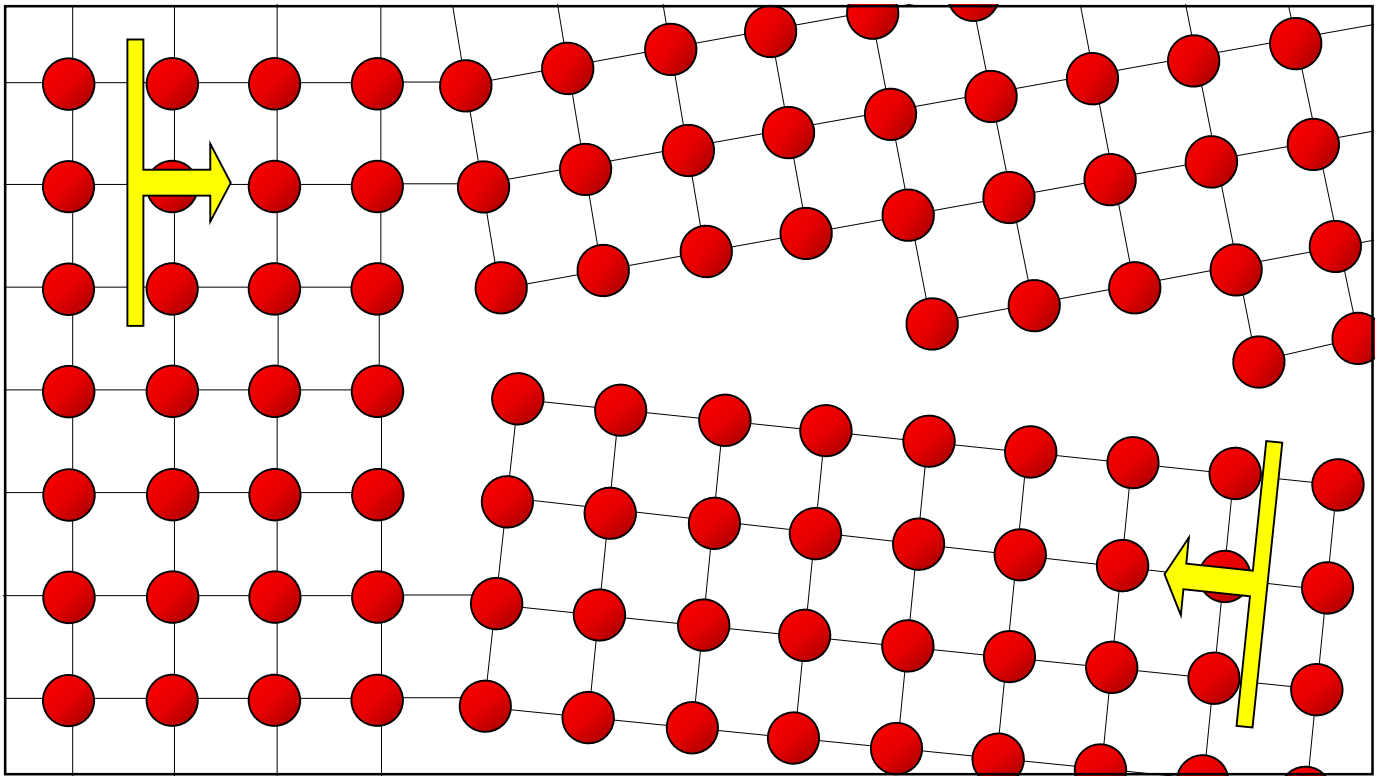

130

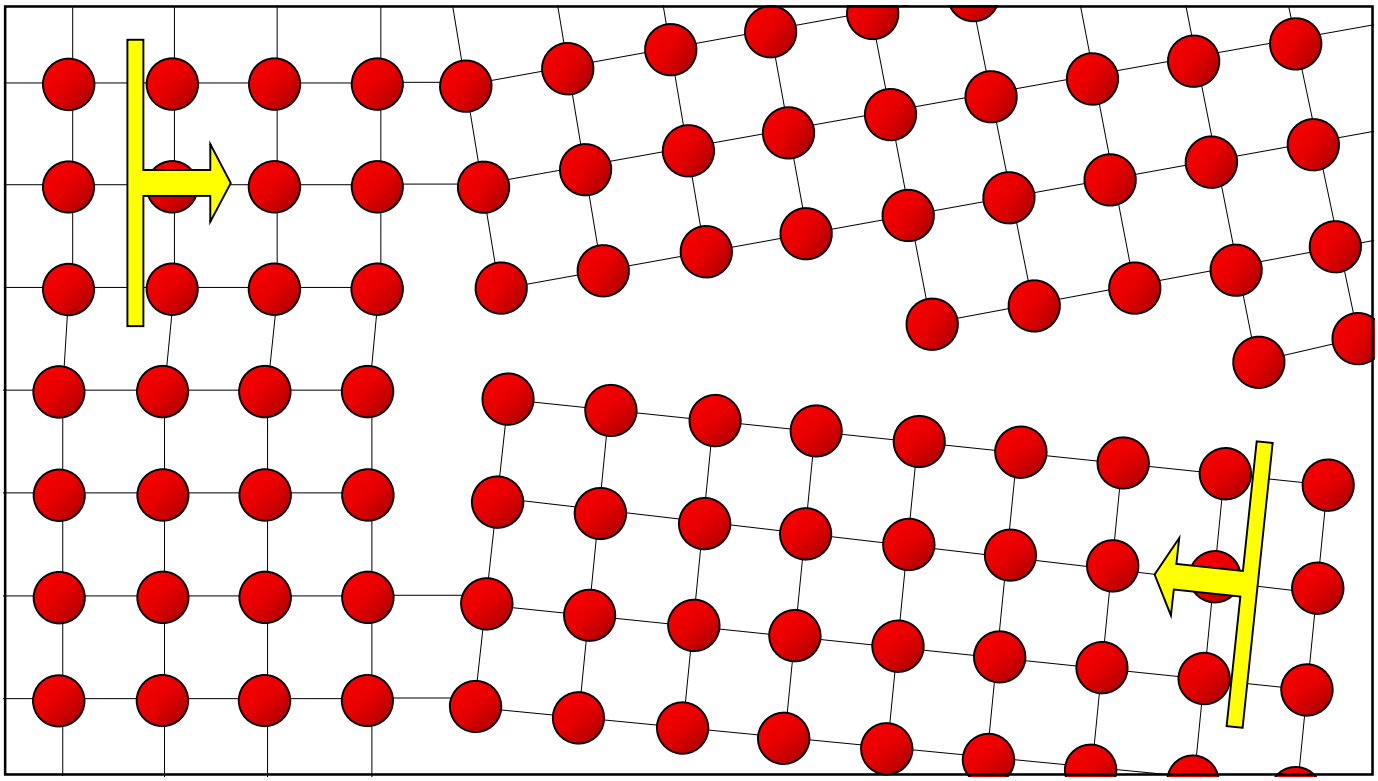

131

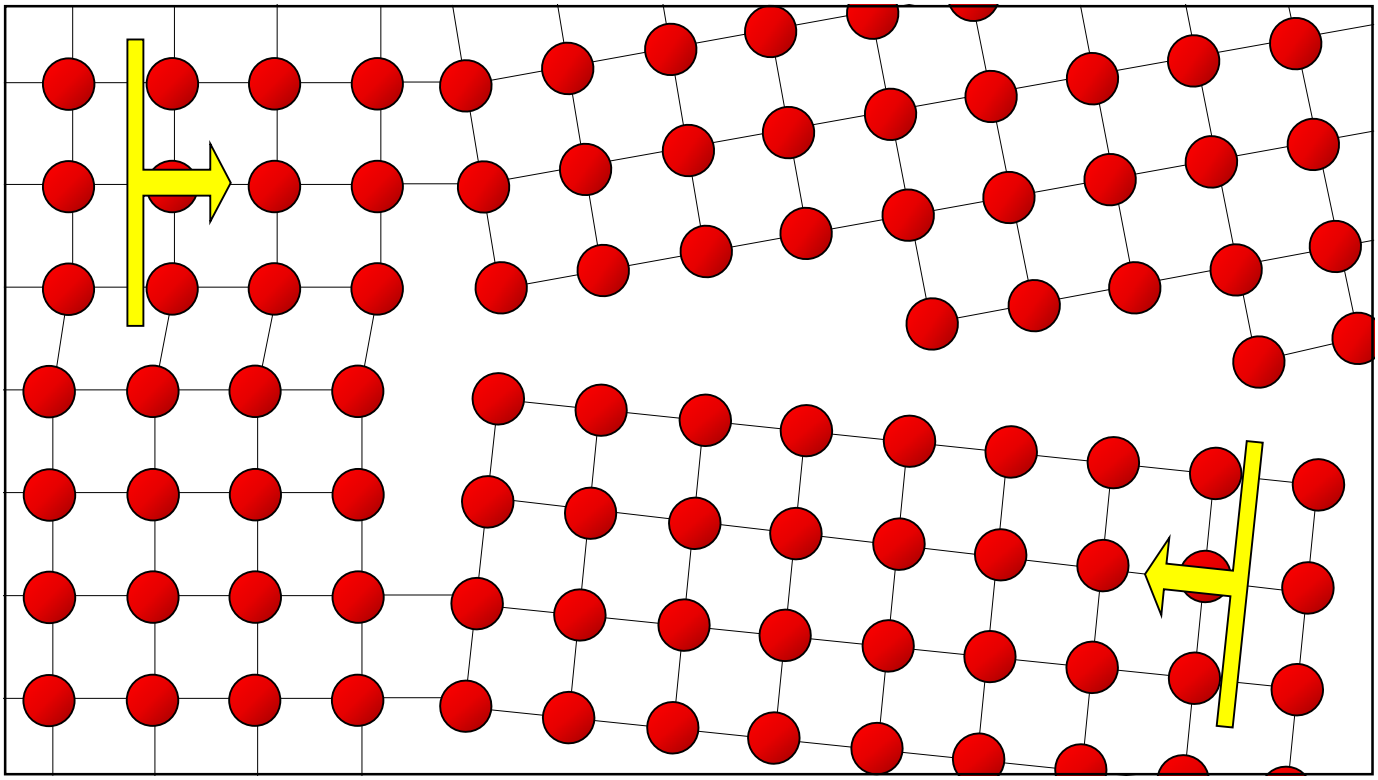

132

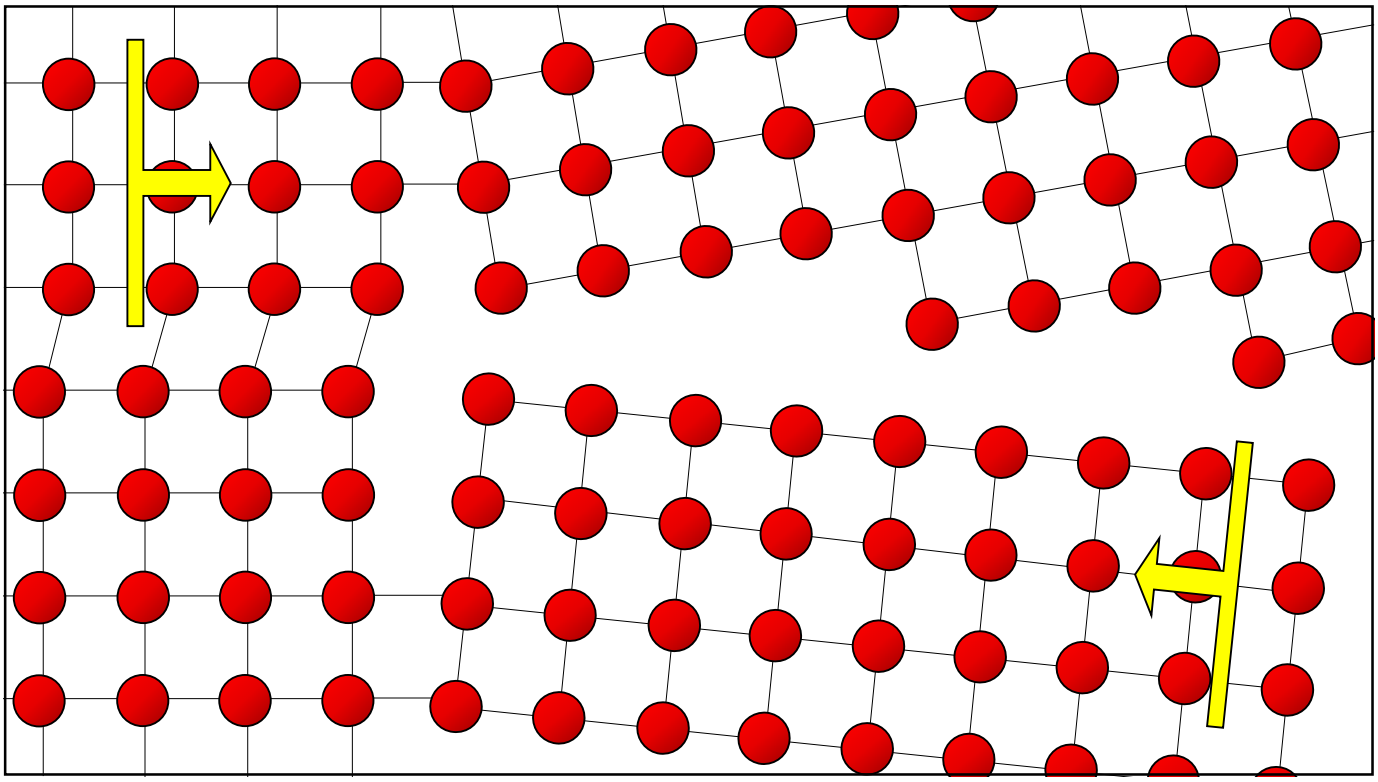

133

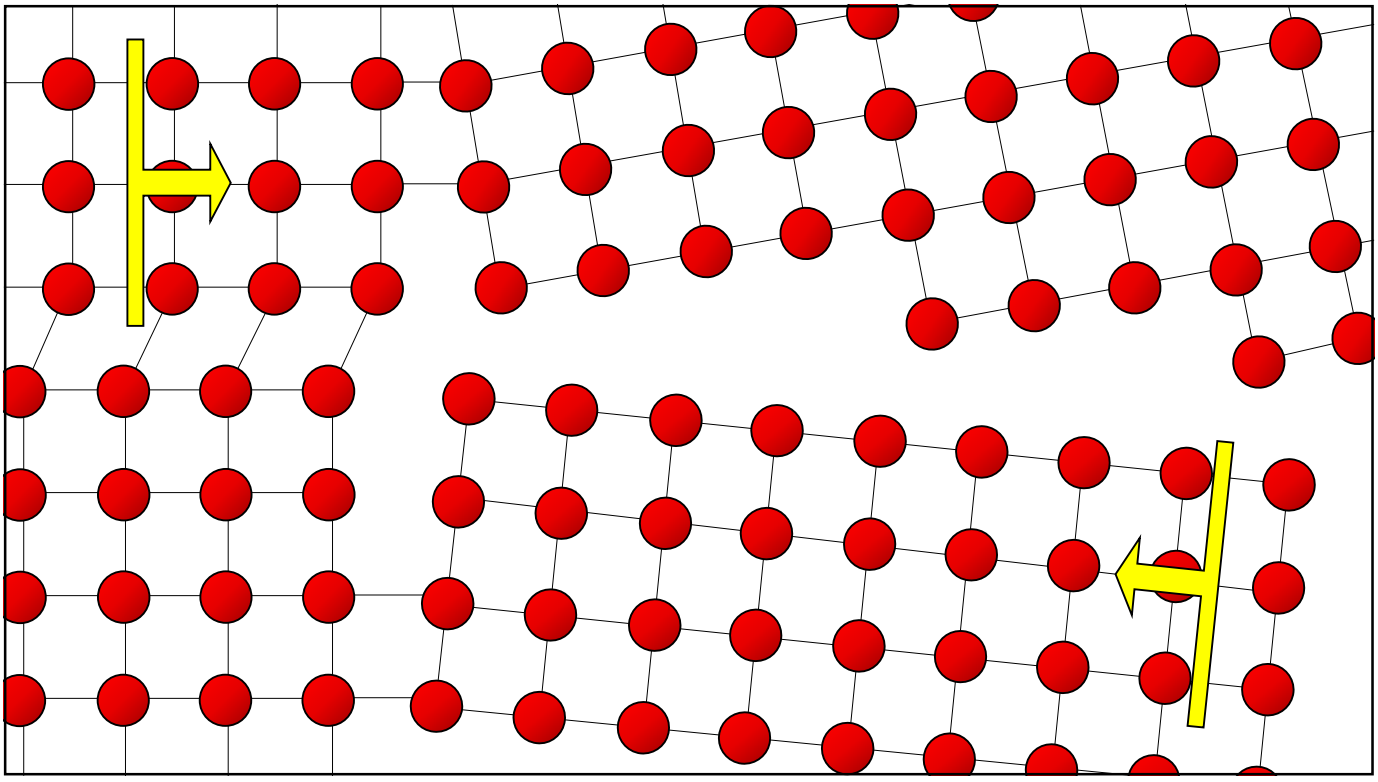

134

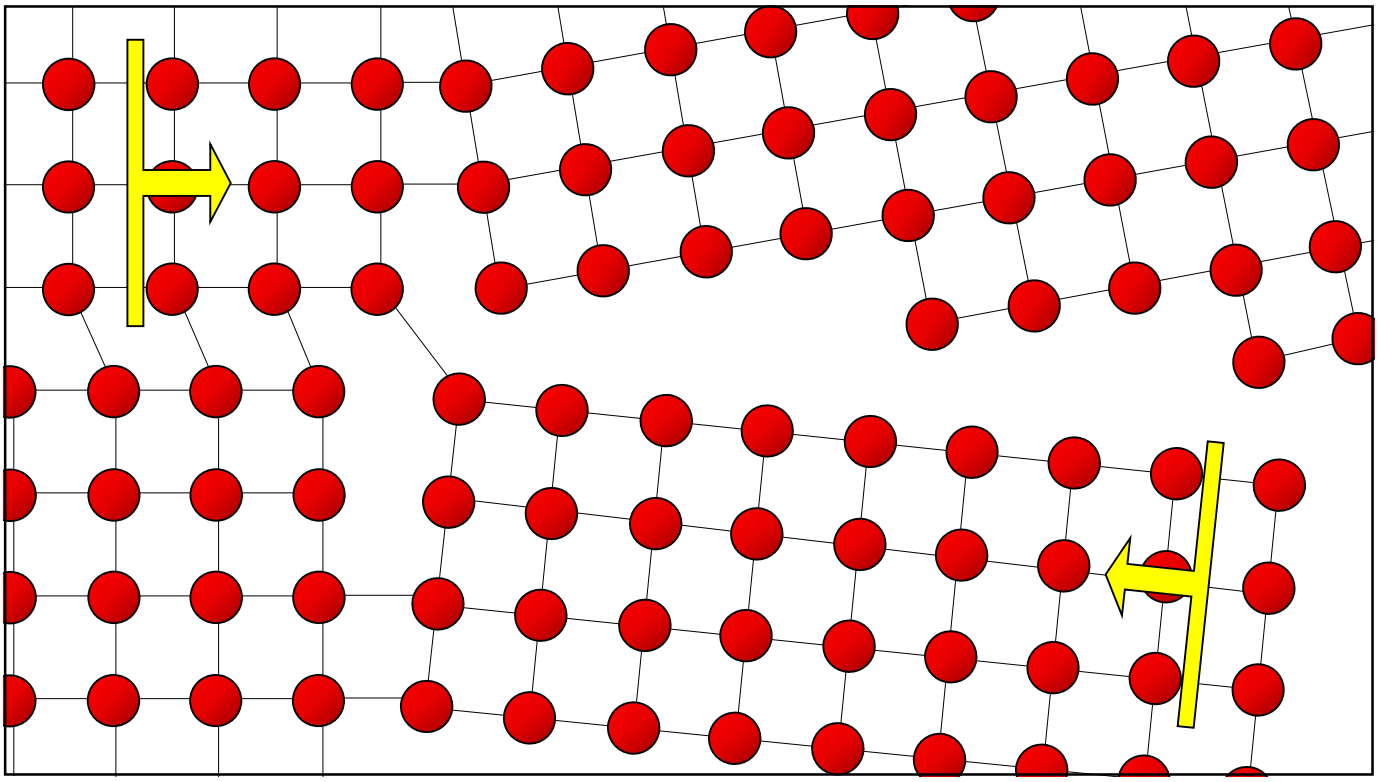

135

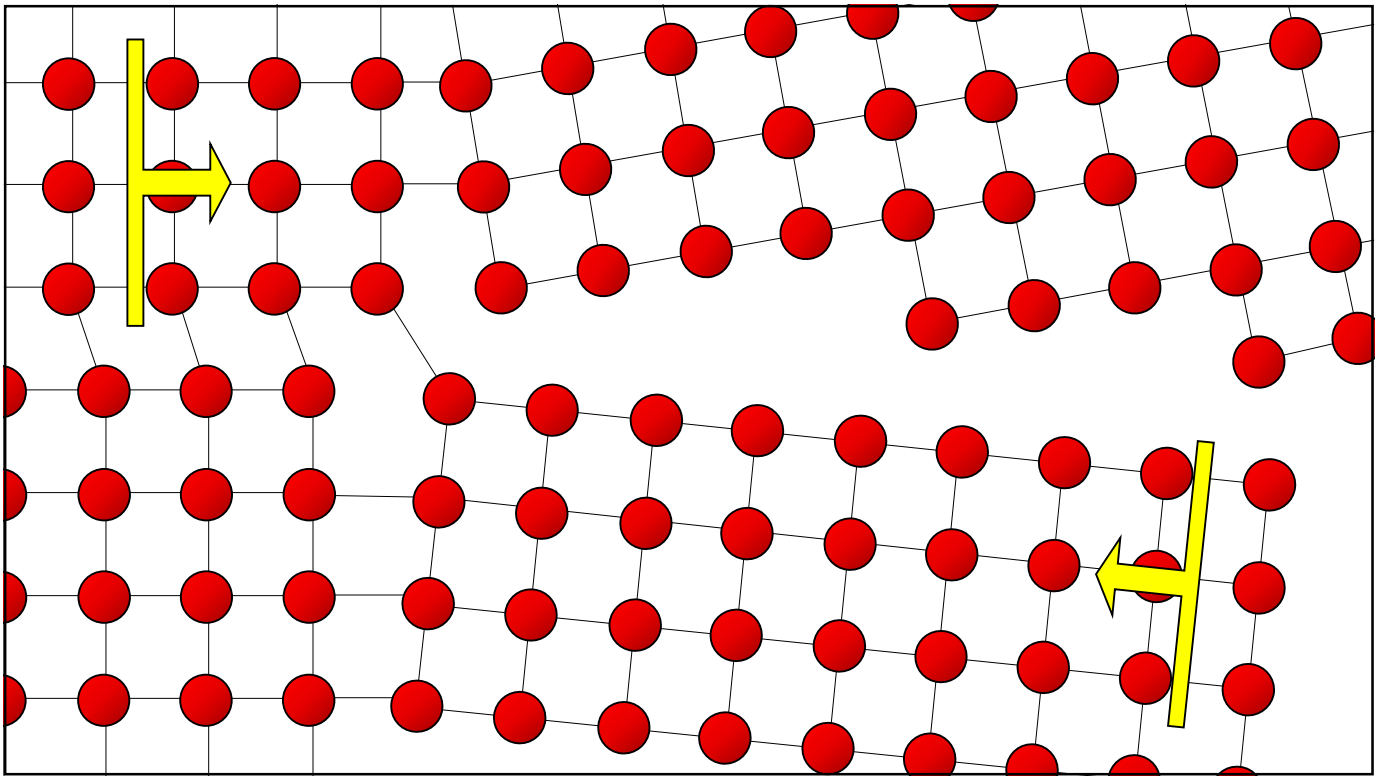

136

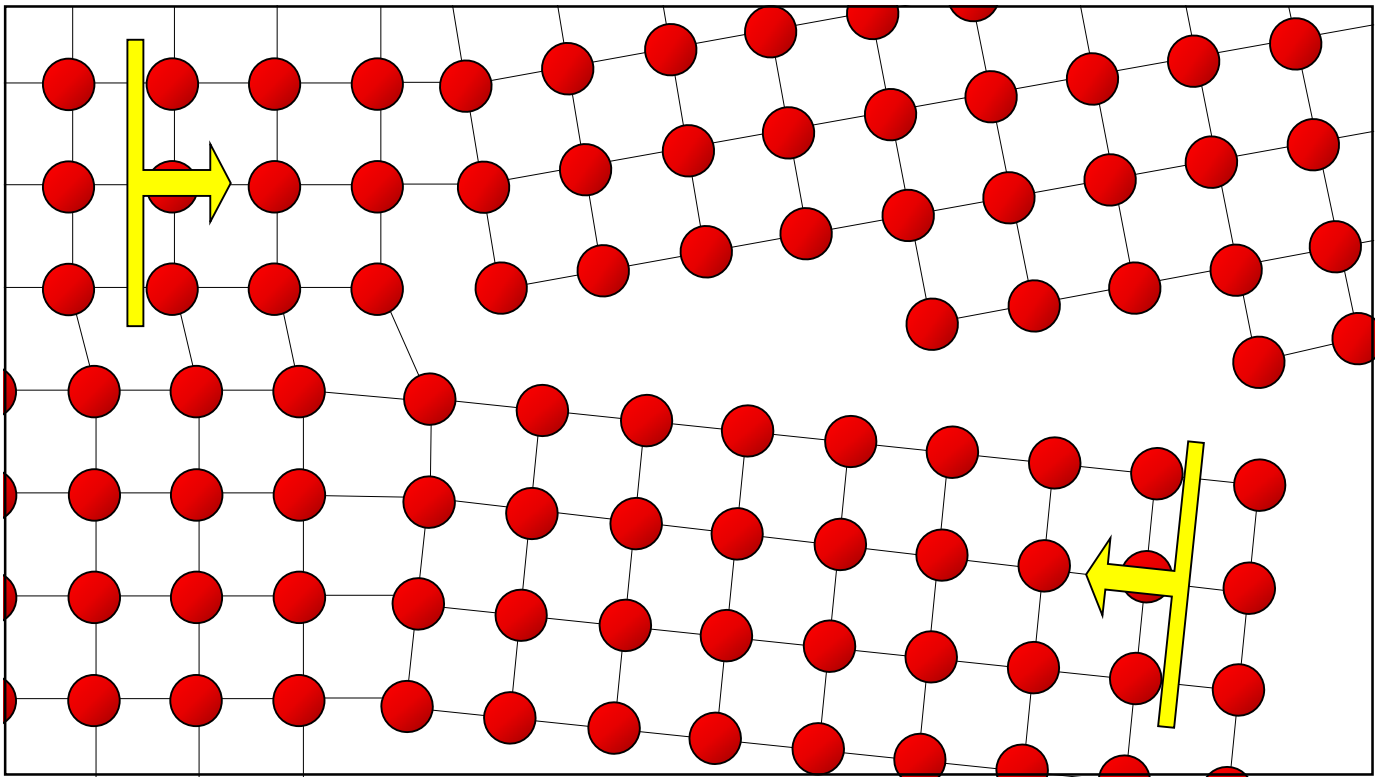

137

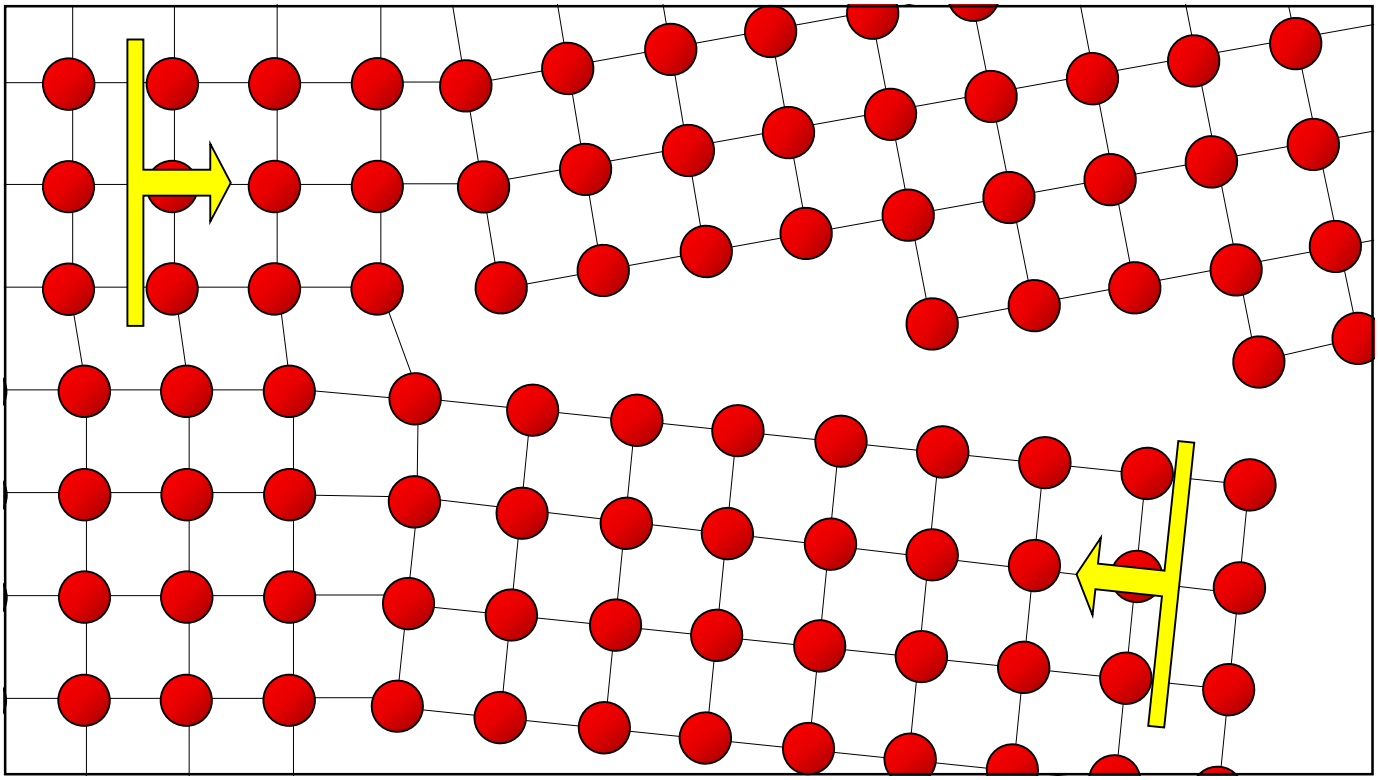

138

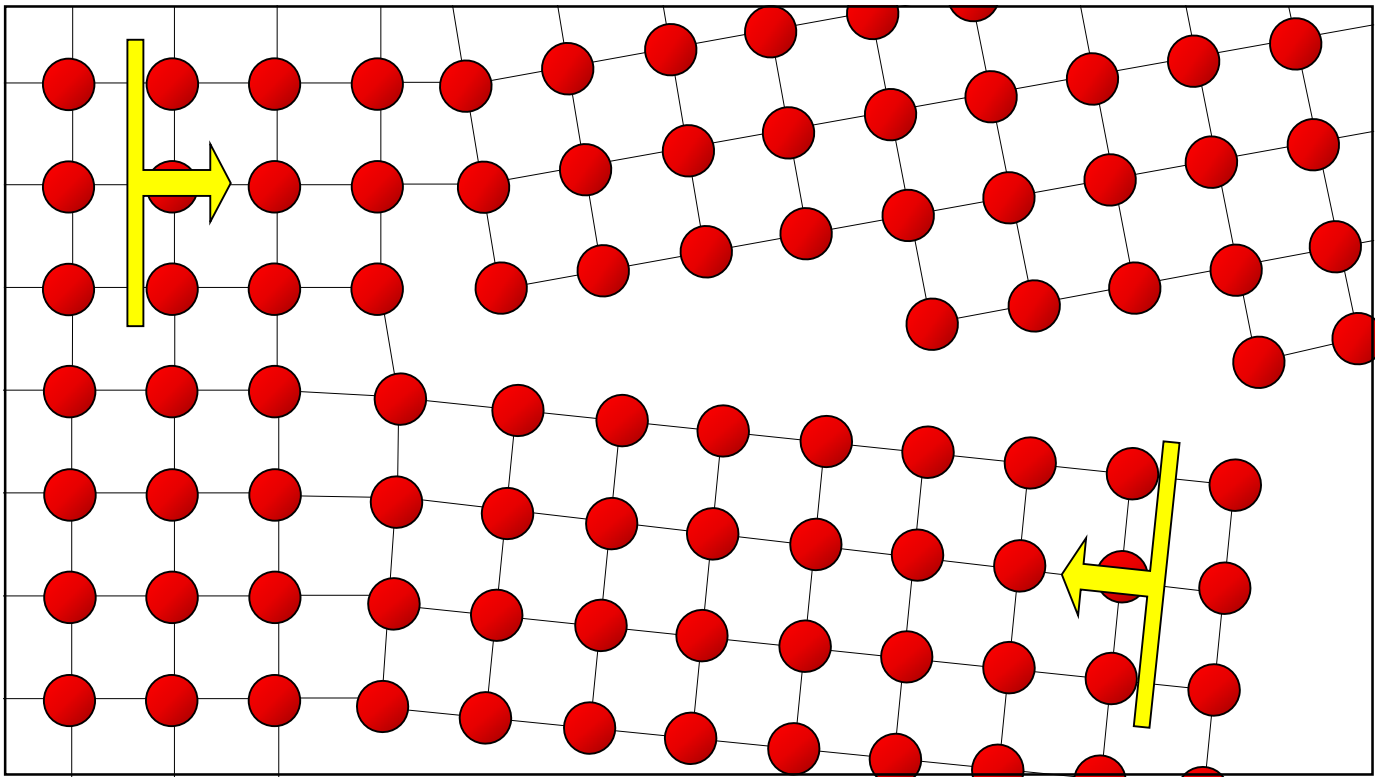

139

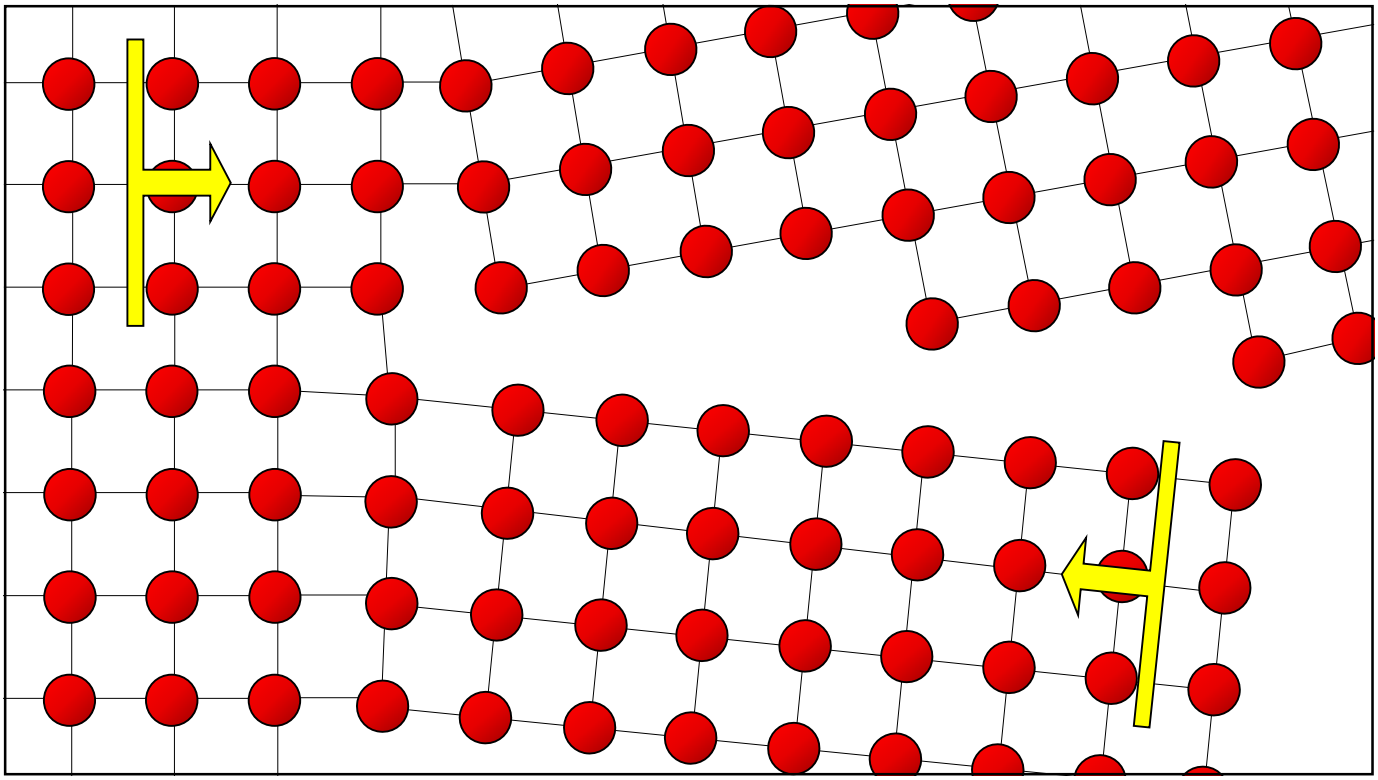

140

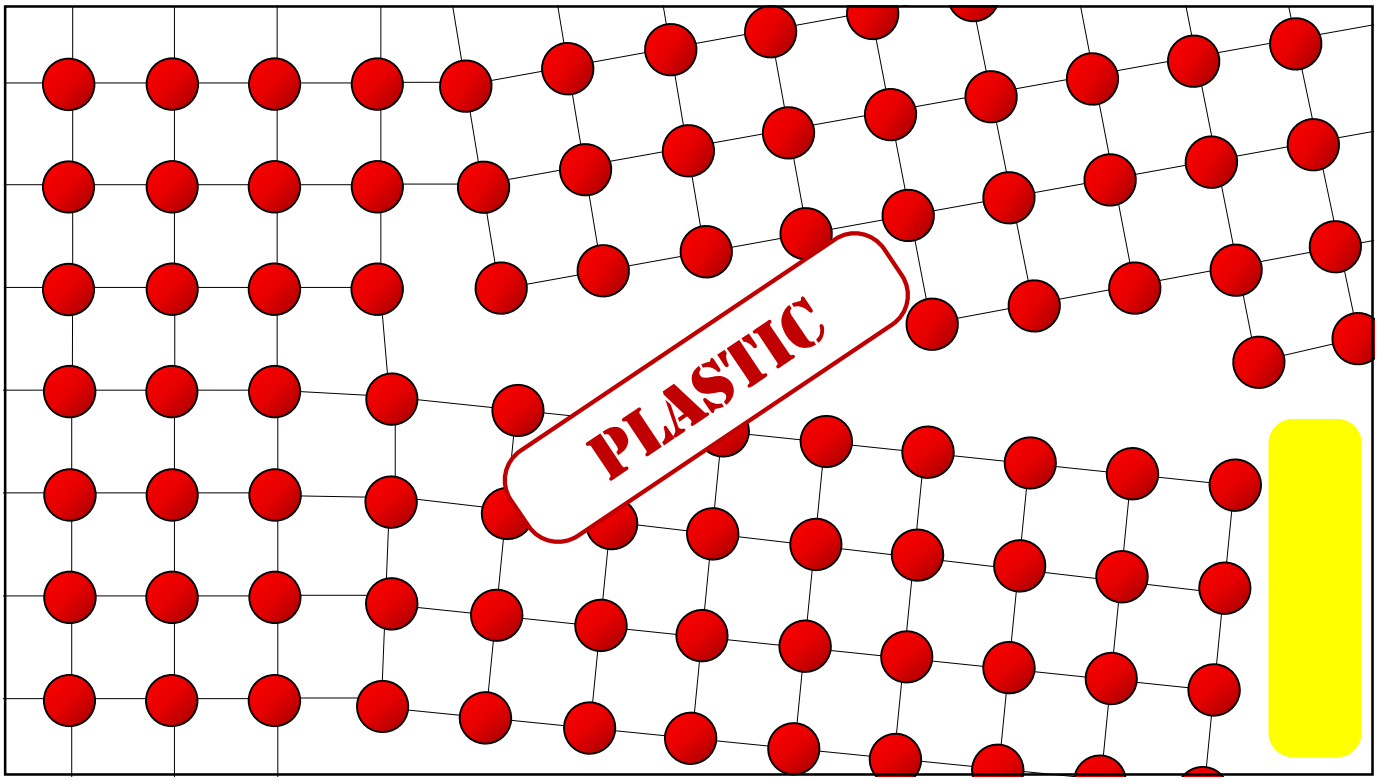

141

Body Centered Cubic (BCC)

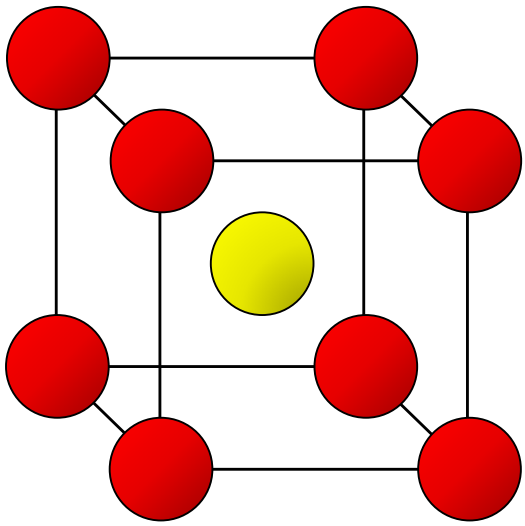

142

Body Centered Cubic (BCC)

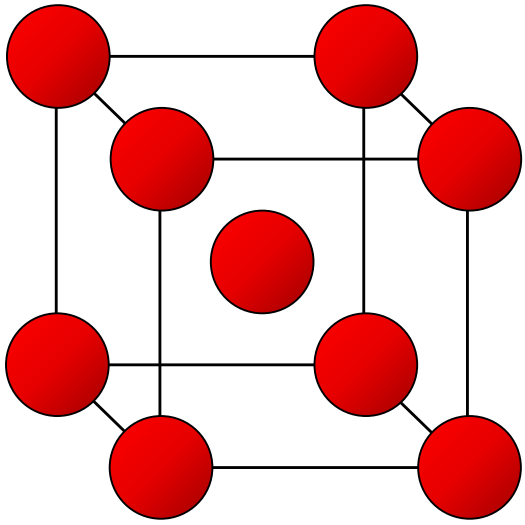

Atomic Packing

143

Body Centered Cubic (BCC)

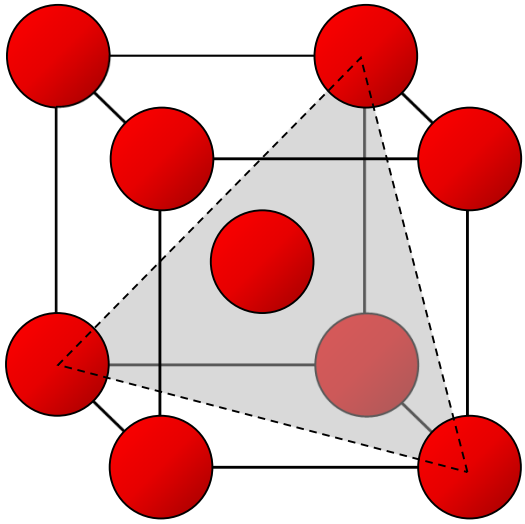

144

Body Centered Cubic (BCC)

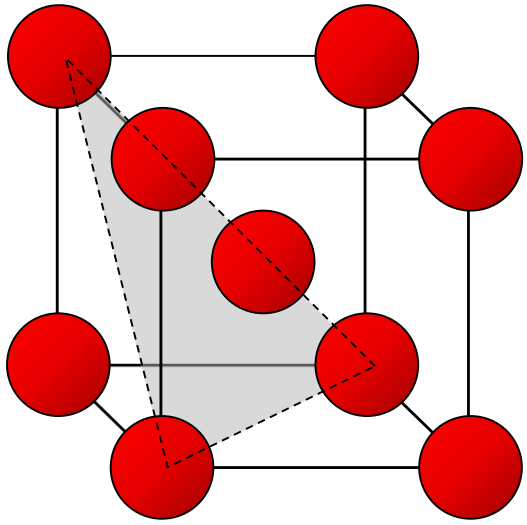

145

Body Centered Cubic (BCC)

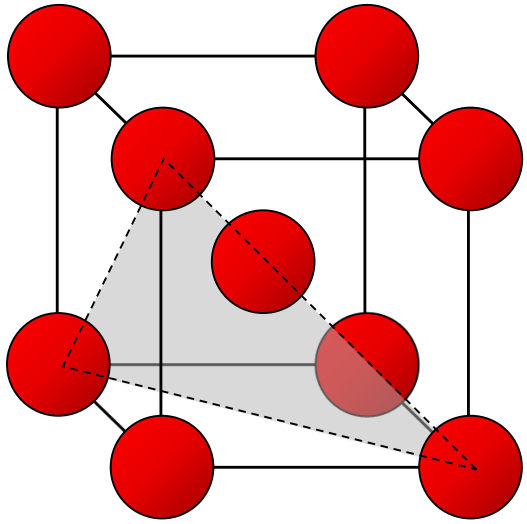

146

Body Centered Cubic (BCC)

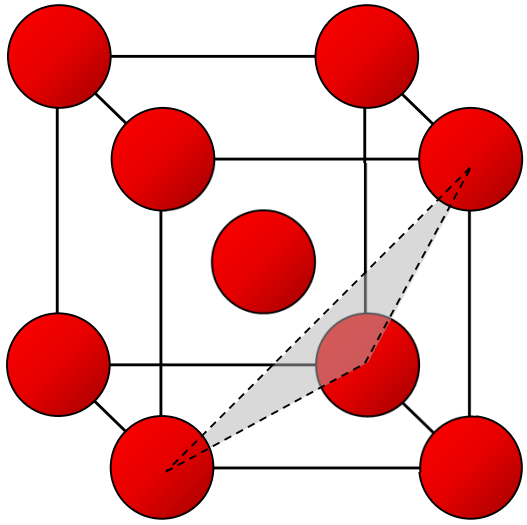

147

Body Centered Cubic (BCC)

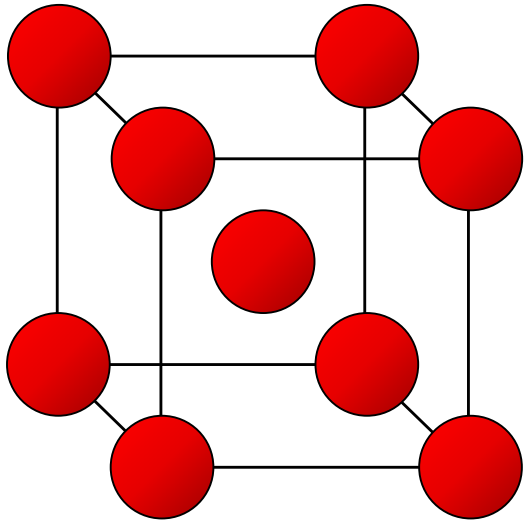

148

Body Centered Cubic (BCC)

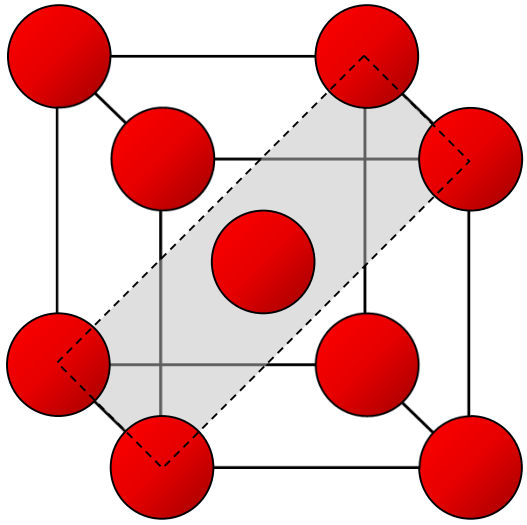

149

Body Centered Cubic (BCC)

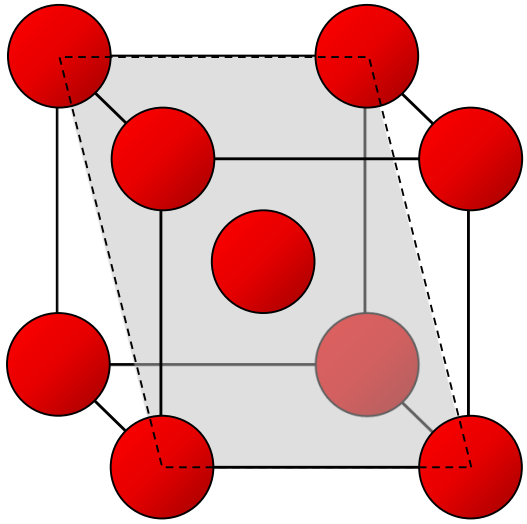

150

Body Centered Cubic (BCC)

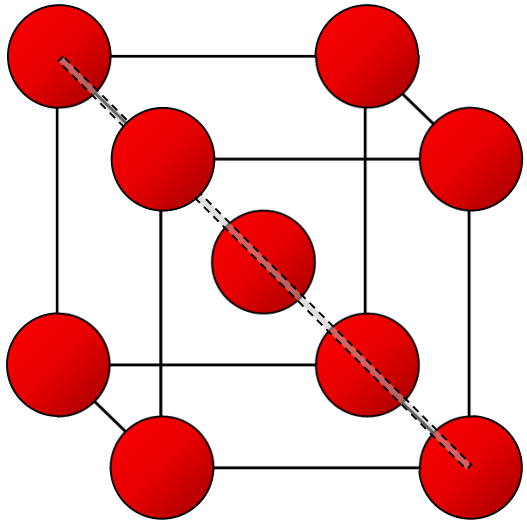

151

Body Centered Cubic (BCC)

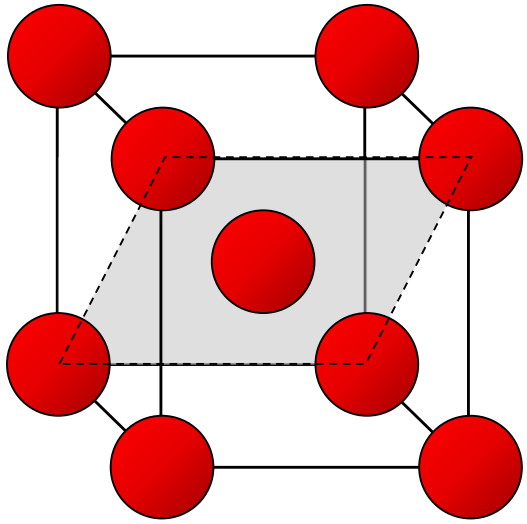

152

Body Centered Cubic (BCC)

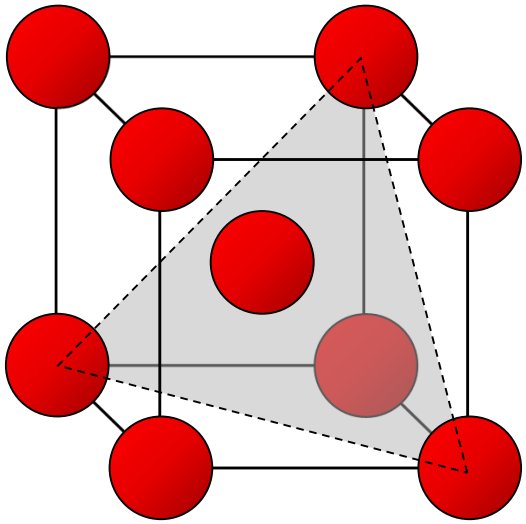

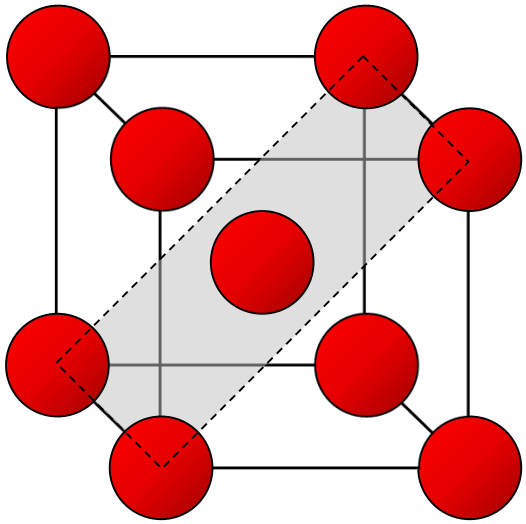

153

Body Centered Cubic (BCC)

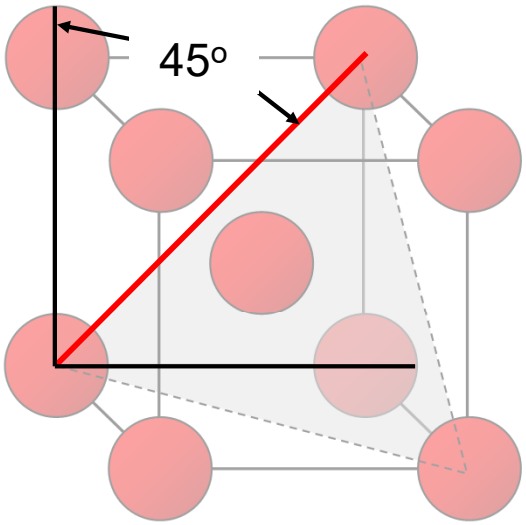

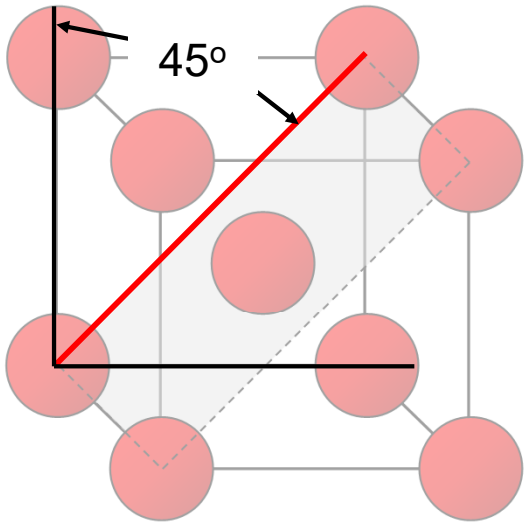

154

Ductility: Another View

Outline

- Introduction
- A Wrong View
- A Corrected View
- The View of Physics

Lennard Jones Potential, Atomic Interactions, Dislocations, Atomic Packing

155

Ductility: Another View

Outline

- Introduction
- A Wrong View
- A Corrected View
- The View of Physics
- Application of the Correct View

156

STRENGTH OF METALS UNDER COMBINED STRESSES

"It is well known that a metal may be ductile under one set of conditions and brittle under another. Ductility and brittleness, then are properties that must be considered as referring to some particular set of testing or service conditions."

157

AISC 341-16 Seismic Provisions

Commentary A1 Scope

Structural steel systems in seismic regions are generally expected to dissipate seismic input energy through controlled inelastic deformations of the structure. The Provisions supplement the Specification for such applications. The seismic design loads specified in the building codes have been developed considering the energy dissipation generated during inelastic response.

158

How to Achieve Controlled Inelastic Deformations

159

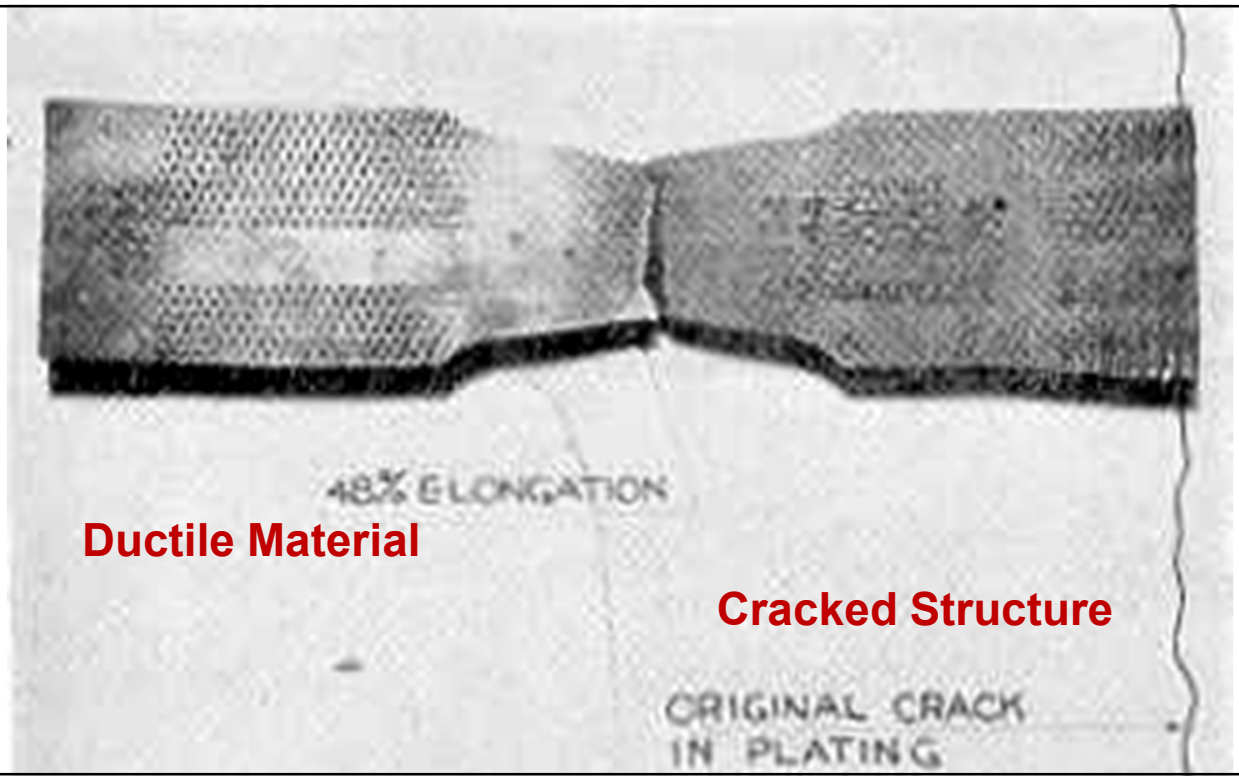

160

How to Achieve Controlled Inelastic Deformations

- Select a ductile material

161

Ductile Design of Steel Structures

Bruneau
Uang
Whittaker

1998

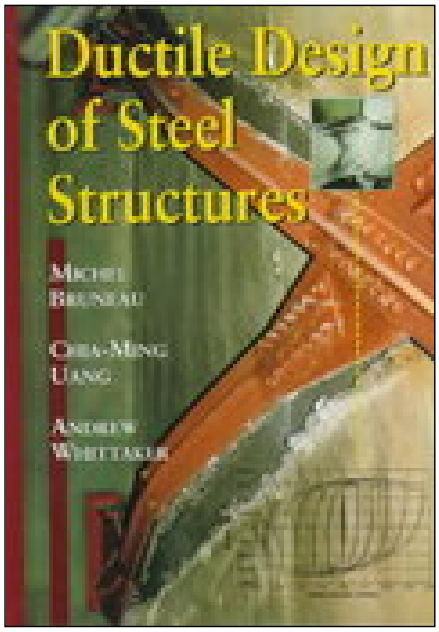

162

Ductile Design of Steel Structures

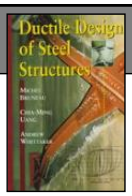

Preface

"Many practicing engineers have wrongly believed for years that the ductile nature of the structural steel material directly translates into inherently ductile structures."

Correct view: the ductile nature of steel does not directly translate into a ductile structure.

163

Ductile Material



Ductile Structure



Correct view: the ductile nature of steel does not directly translate into a ductile structure.

164

164

Ductile Design of Steel Structures

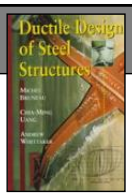

Chapter 1 Introduction

"However, there are many situations in which an explicit approach to the design of ductile steel structures is necessary because the inherent material ductility alone is not sufficient to provide the desired ultimate performance."

165

How to Achieve Controlled Inelastic Deformations

- Select a ductile material
- Avoid conditions that prompt brittle fracture
  (triaxial stress, constraint, notches, low temperatures, high strain rates)

166

Ductile Design of Steel Structures

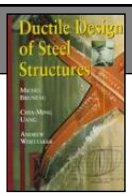

Chapter 1 Introduction

"To achieve this ductile response, one must recognize and avoid conditions that may lead to brittle failures and adopt appropriate design strategies to allow for stable and reliable hysteretic energy-dissipation mechanisms. This sort of thinking is relatively new in structural engineering."

167

Barsom and Rolfe: Fatigue and Fracture Control in Structures

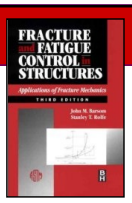

Most structural materials exhibit considerable strain (deformation) before reaching the tensile or ultimate strength….However, under conditions of low temperature, rapid loading and/or high constraint (e.g., when the principle stresses σ_1, σ_2, and σ_3 are essentially equal), even ductile materials may not exhibit any deformation before fracture.

168

STEEL CONSTRUCTION MANUAL 15th Edition



A triaxial state-of-stress can also result from uniaxial loading when notches or geometric discontinuities are present. A triaxial state-of-stress will cause the yield stress of the material to increase above it nominal value, resulting in brittle fracture by cleavage, rather than ductile shear deformations.

page 2-38

169

How to Achieve Controlled Inelastic Deformations

- Select a ductile material
- Avoid conditions that prompt brittle fracture
  (triaxial stress, constraint, notches, low temperatures, high strain rates)
- Encourage shear stresses

170



171



172

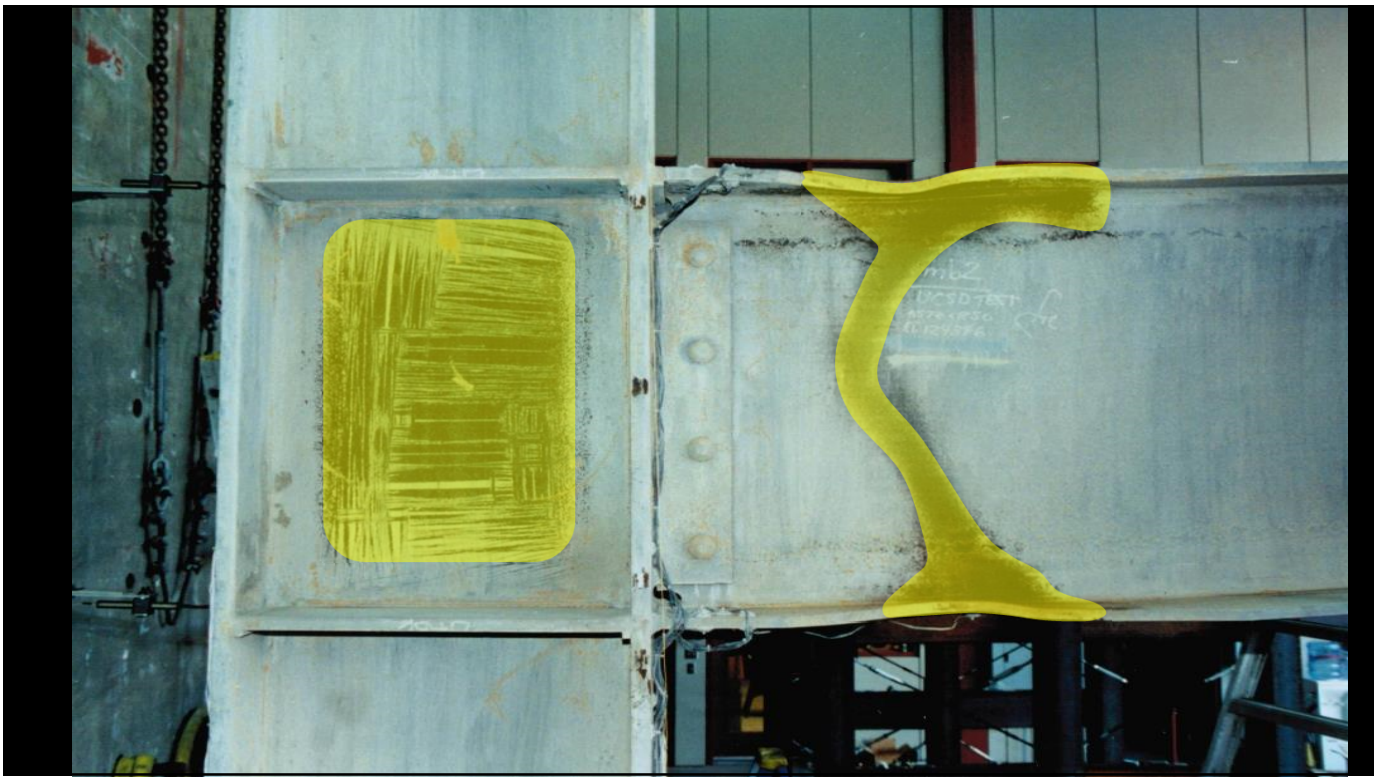

173



174

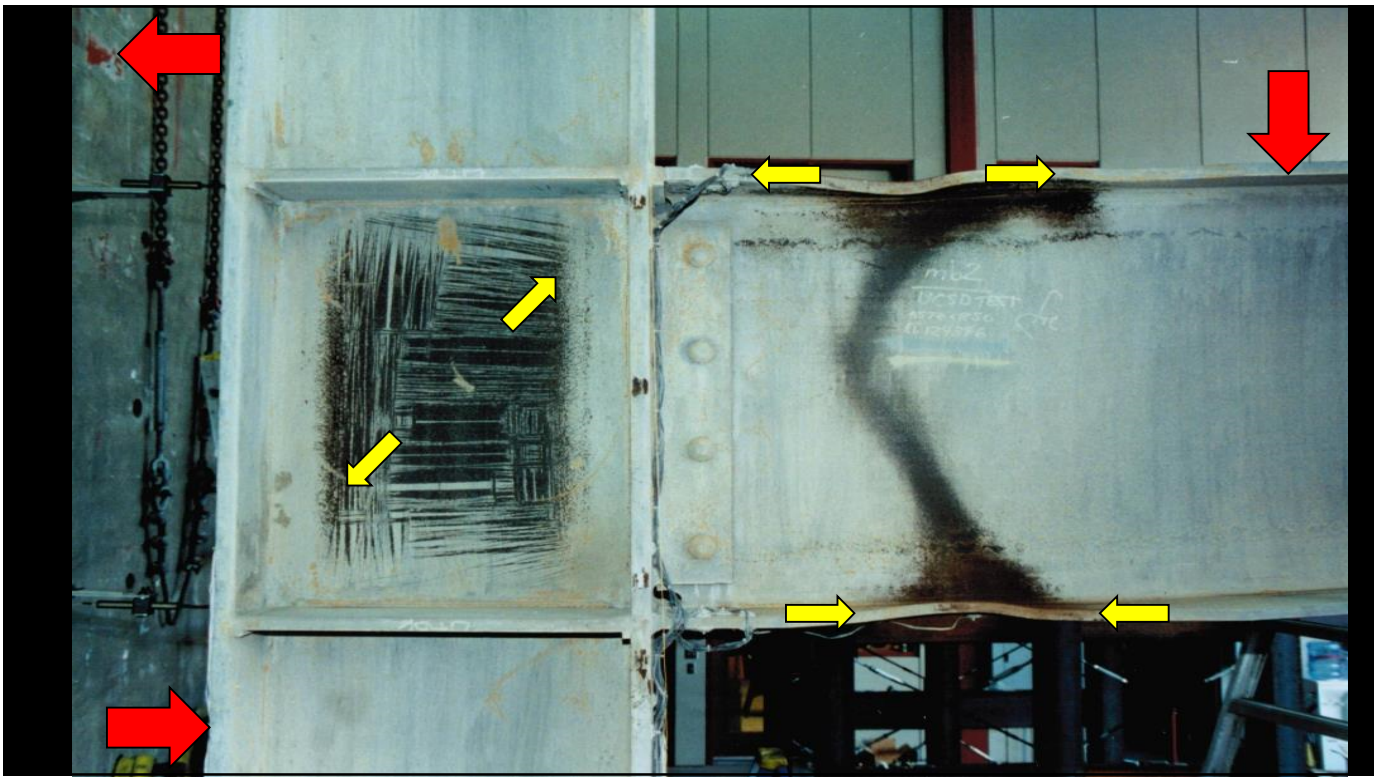

175

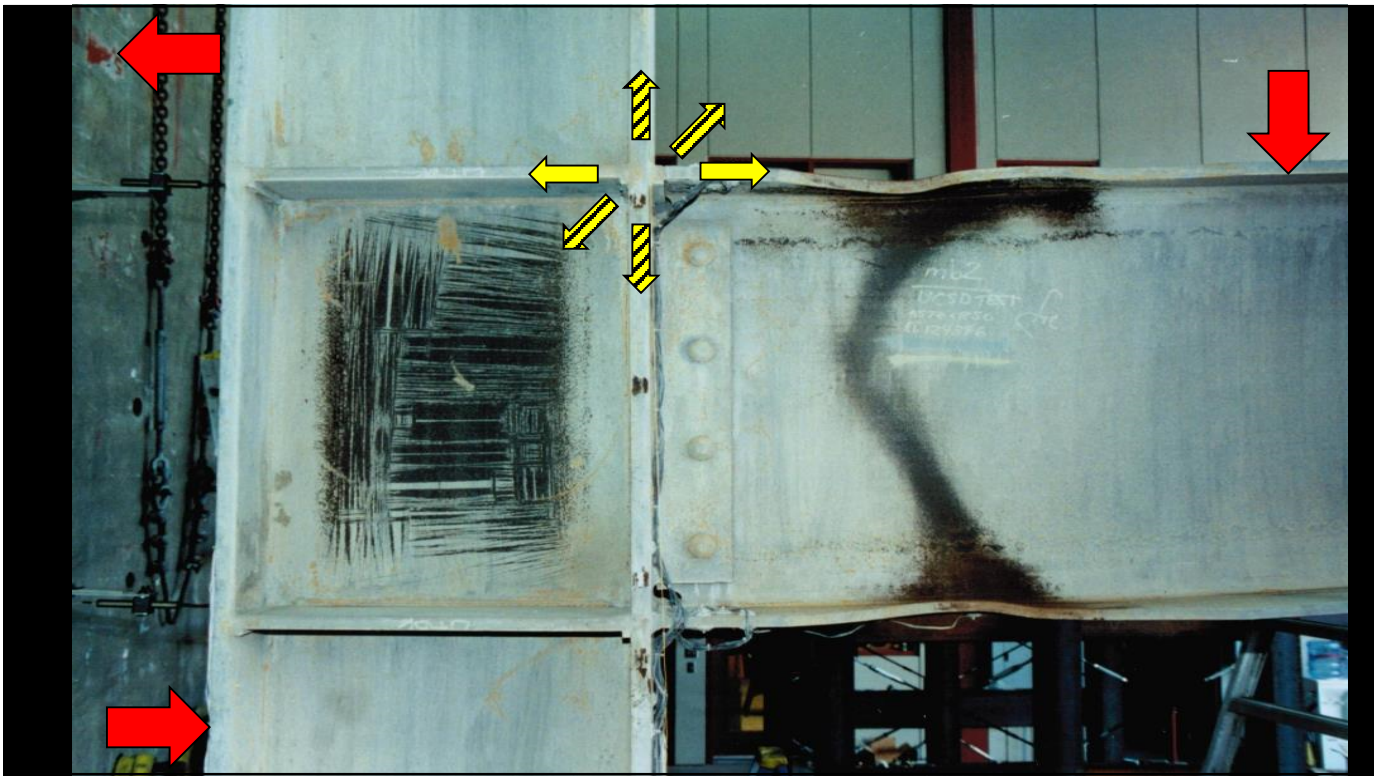

176

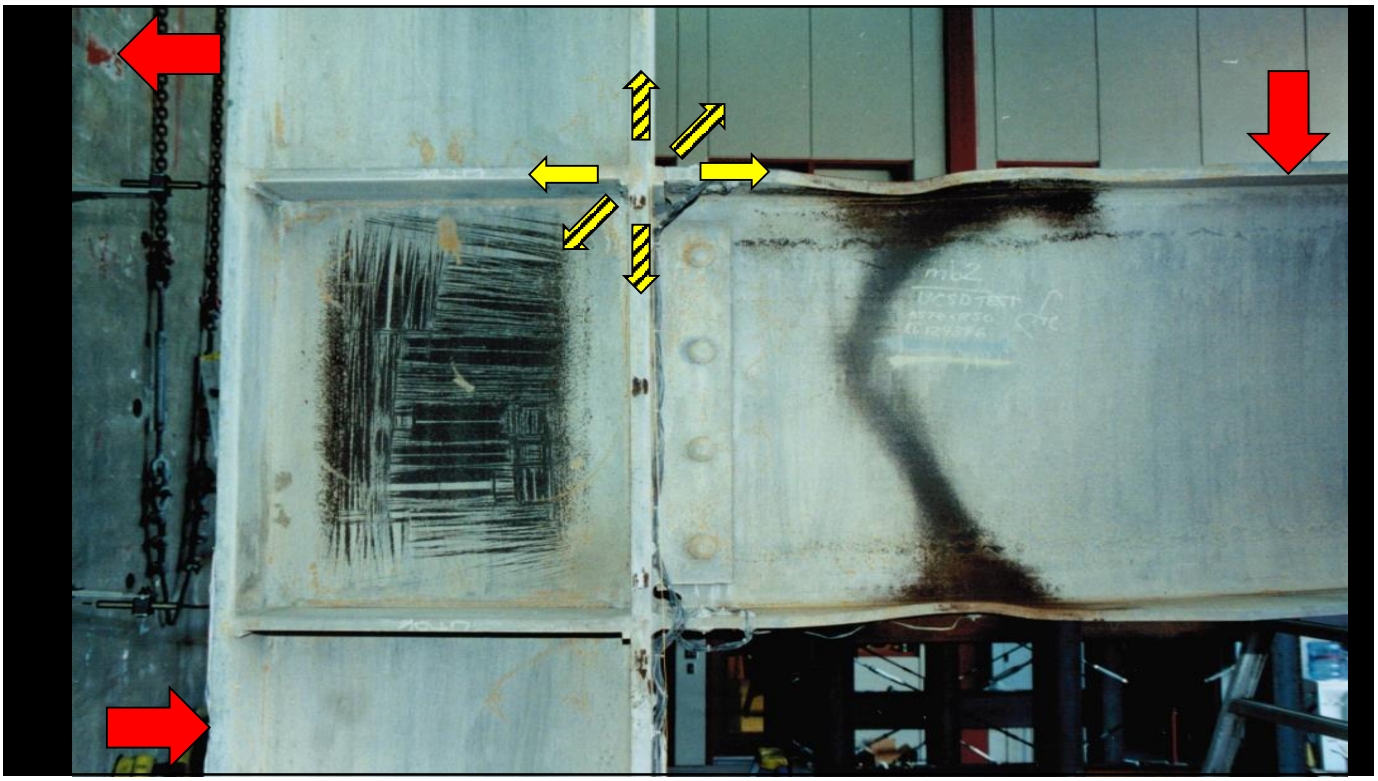

177

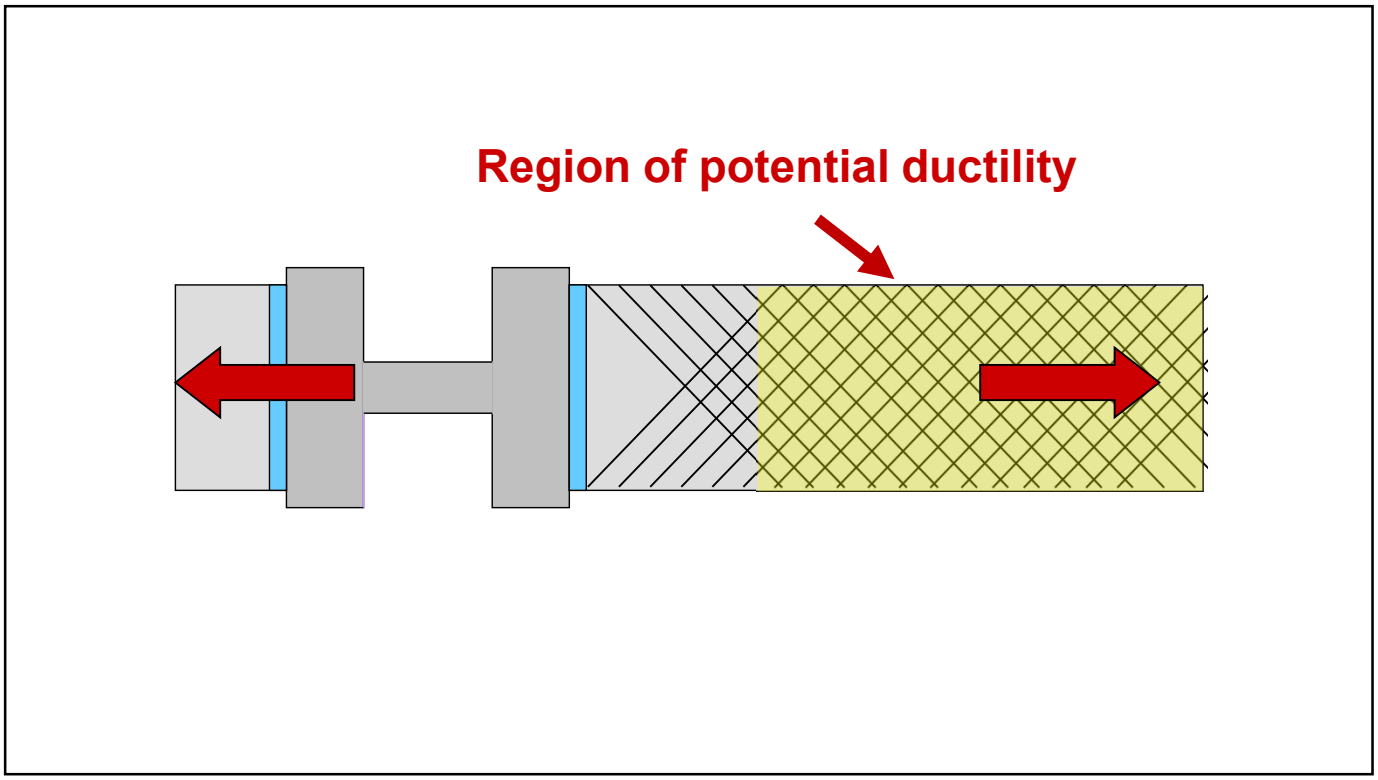

178

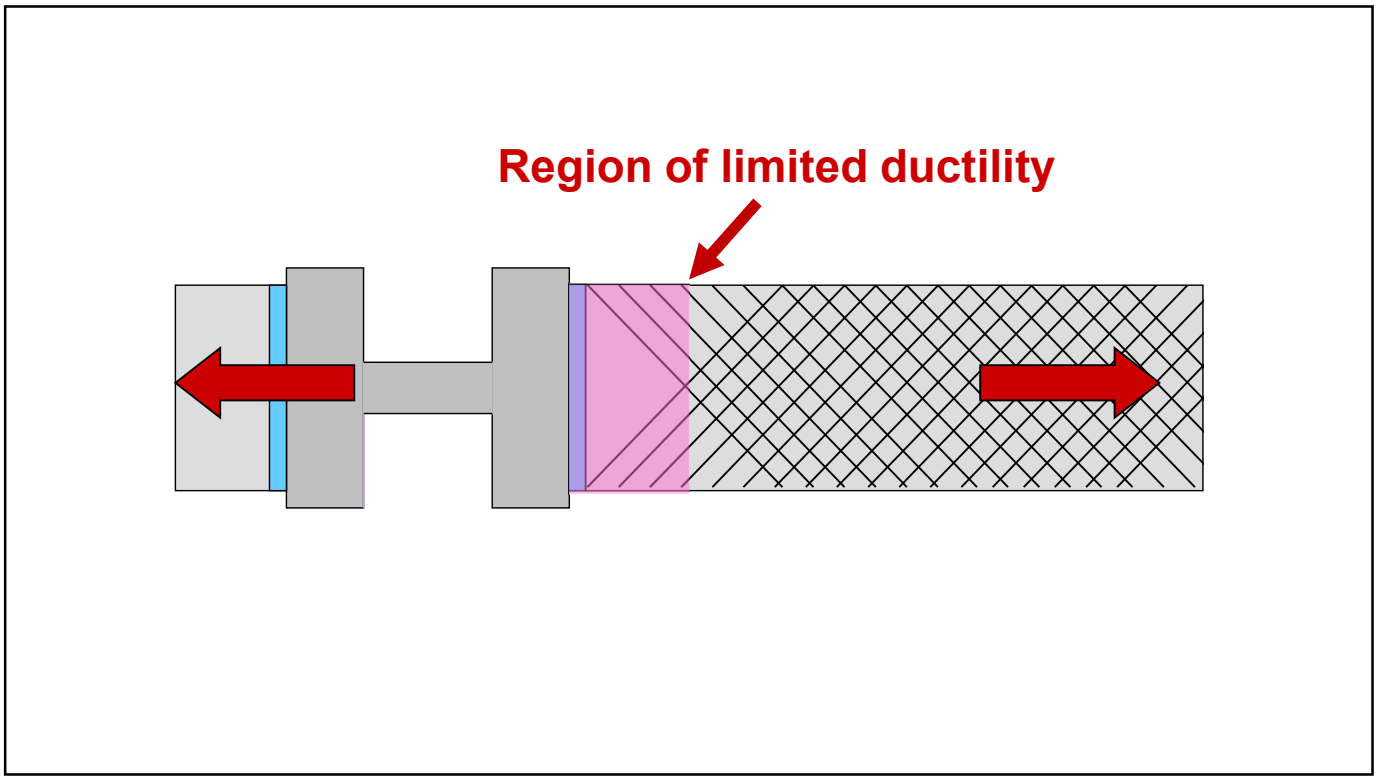

179

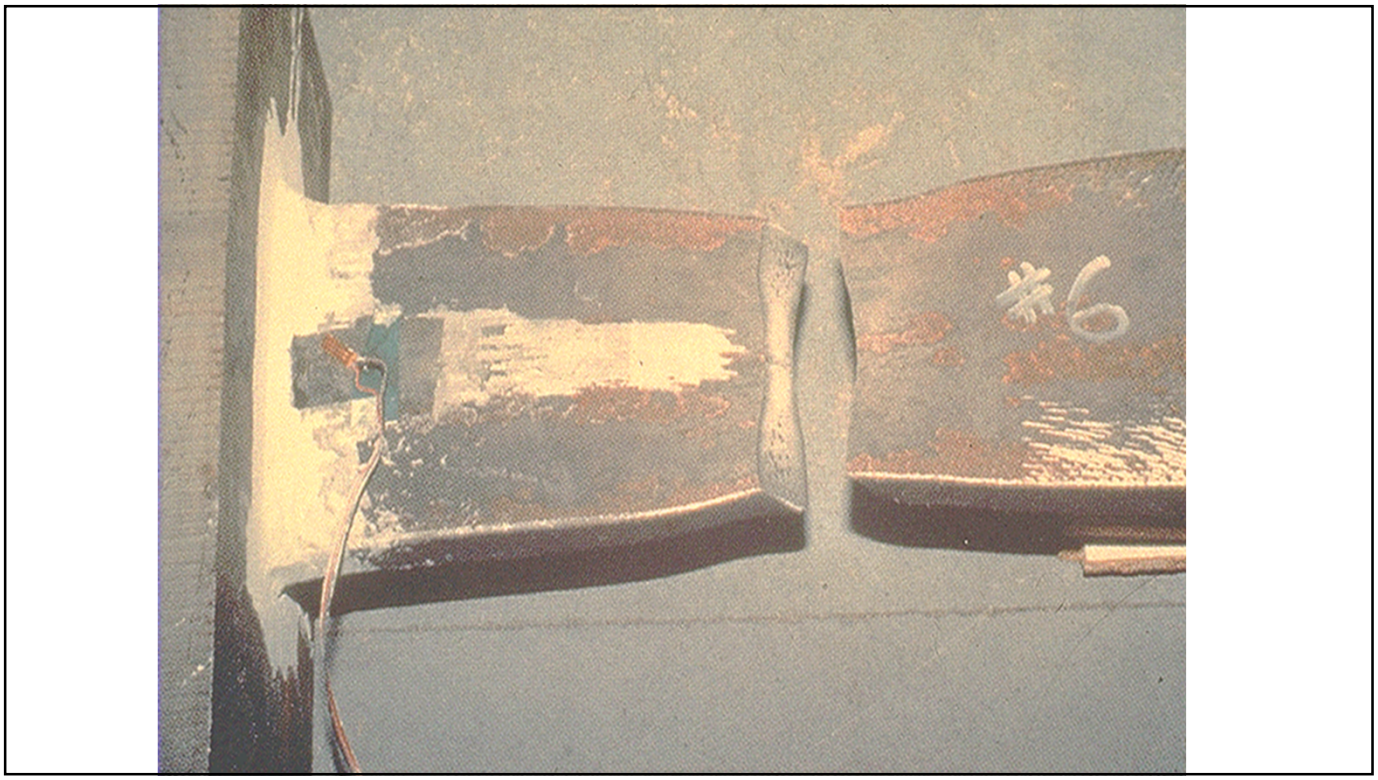

180

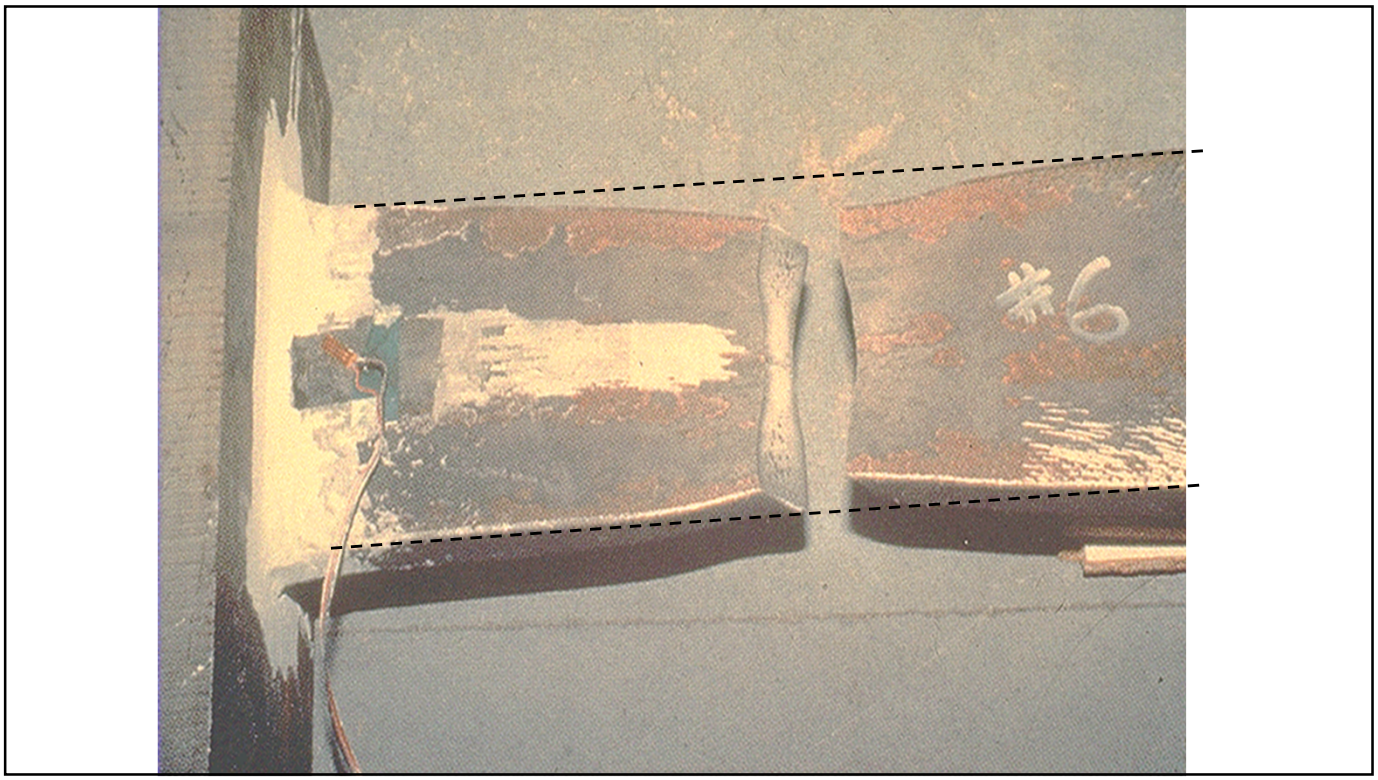

181

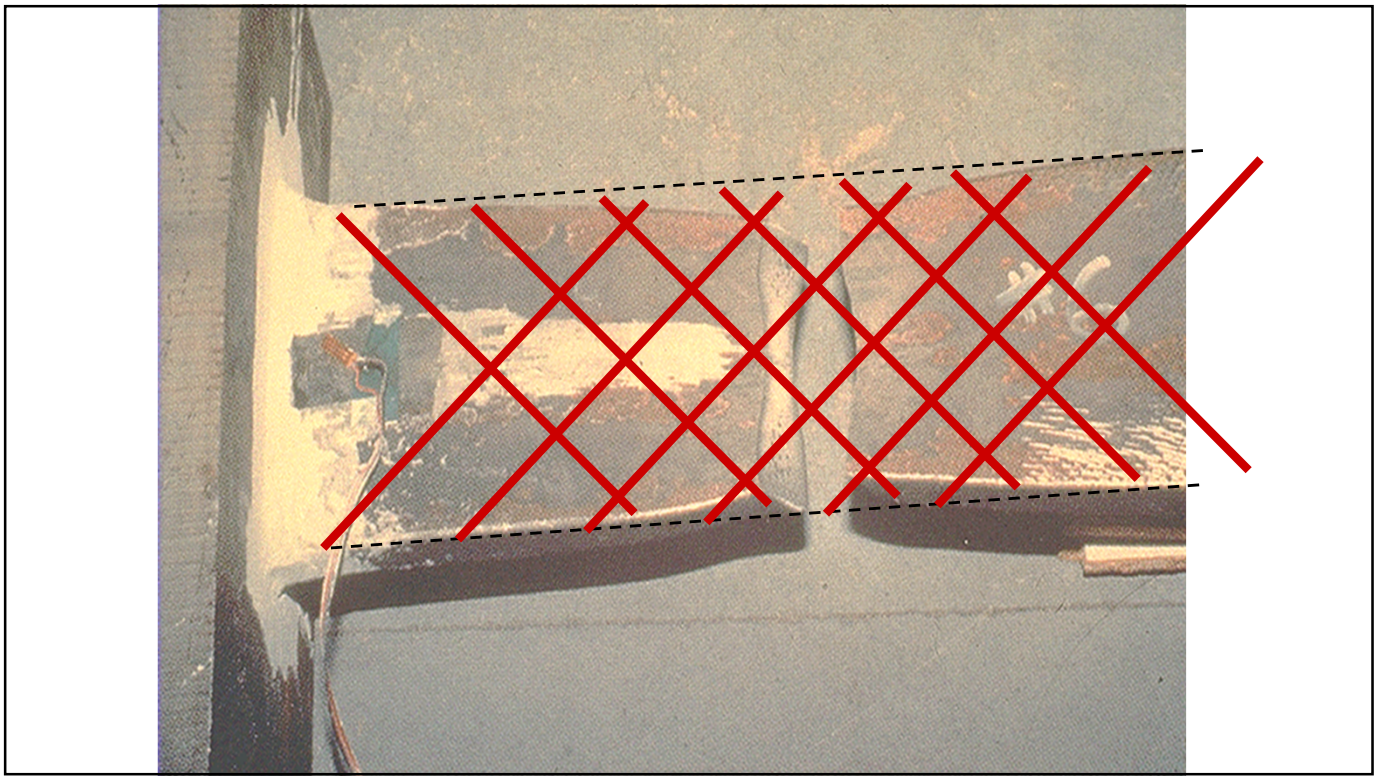

182

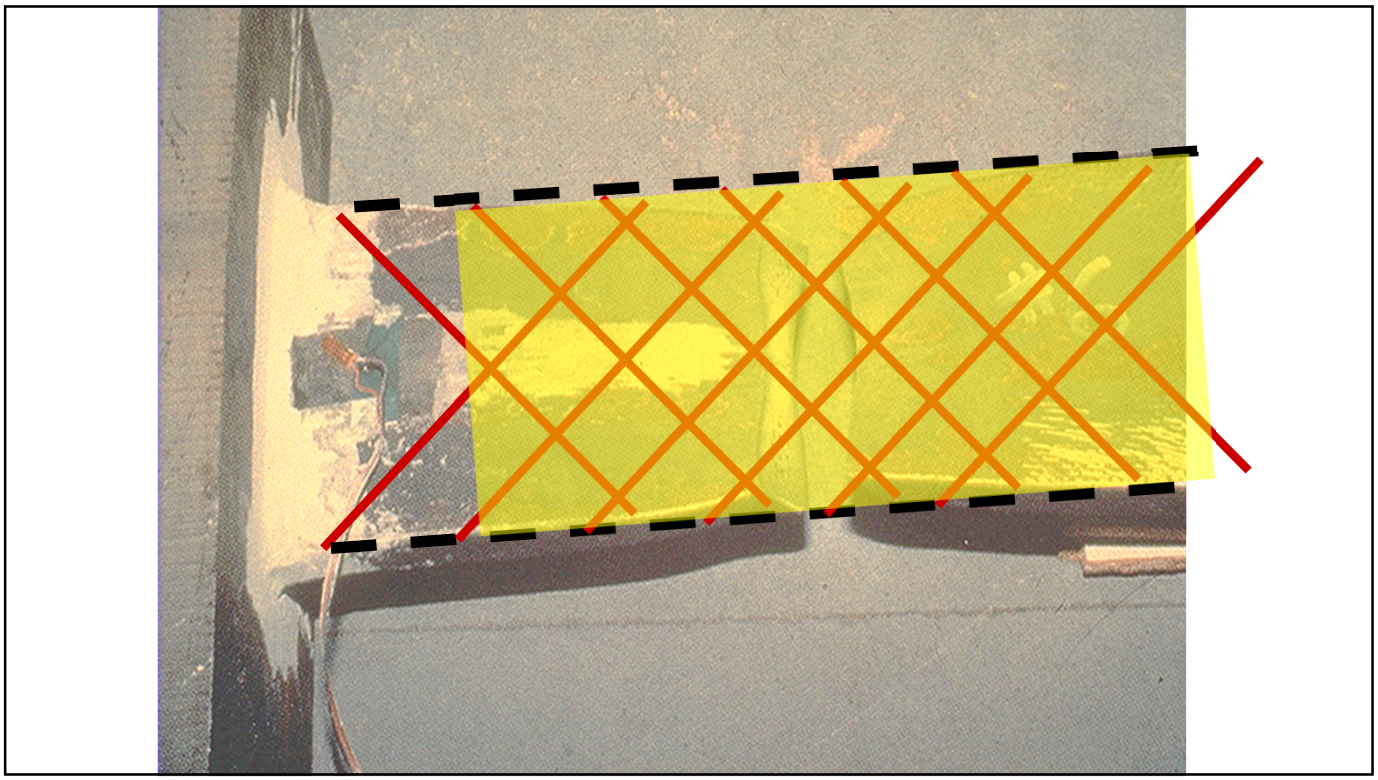

183

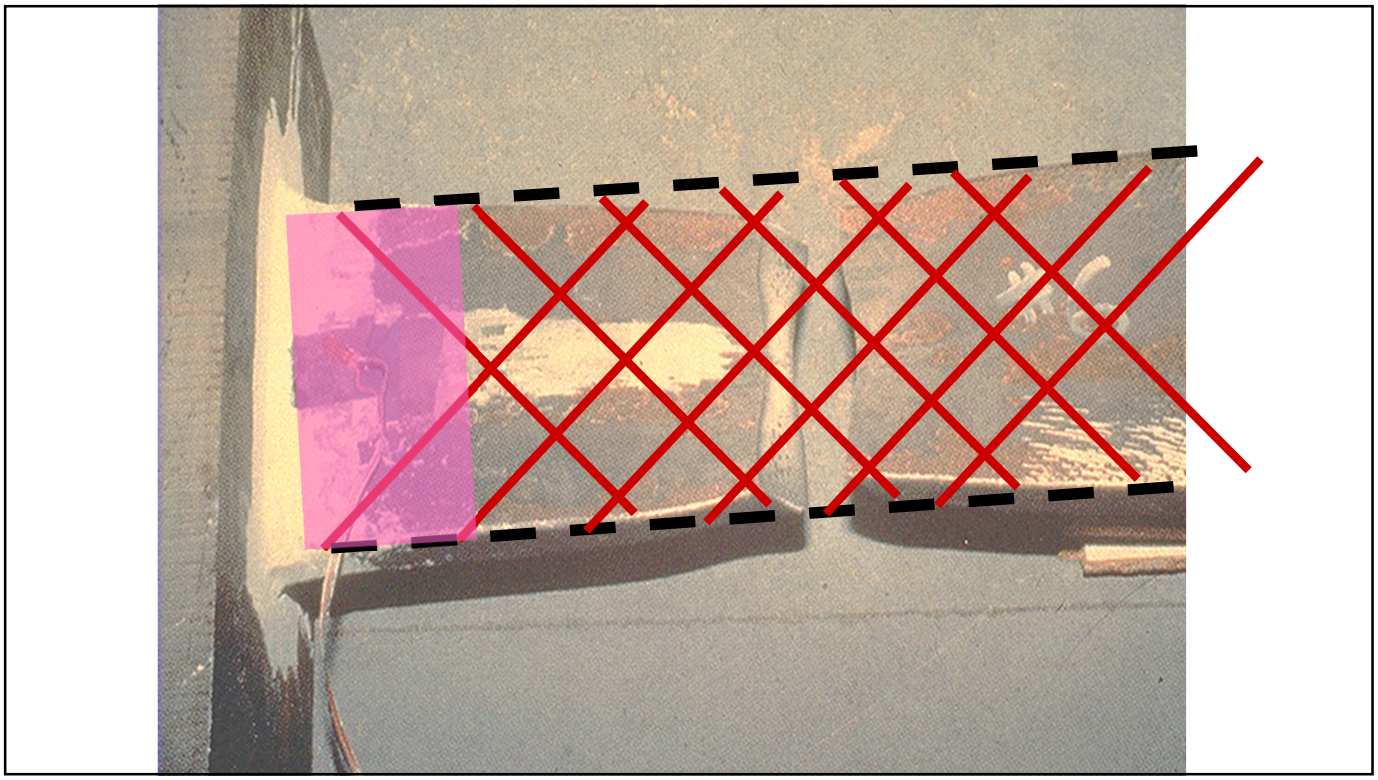

184

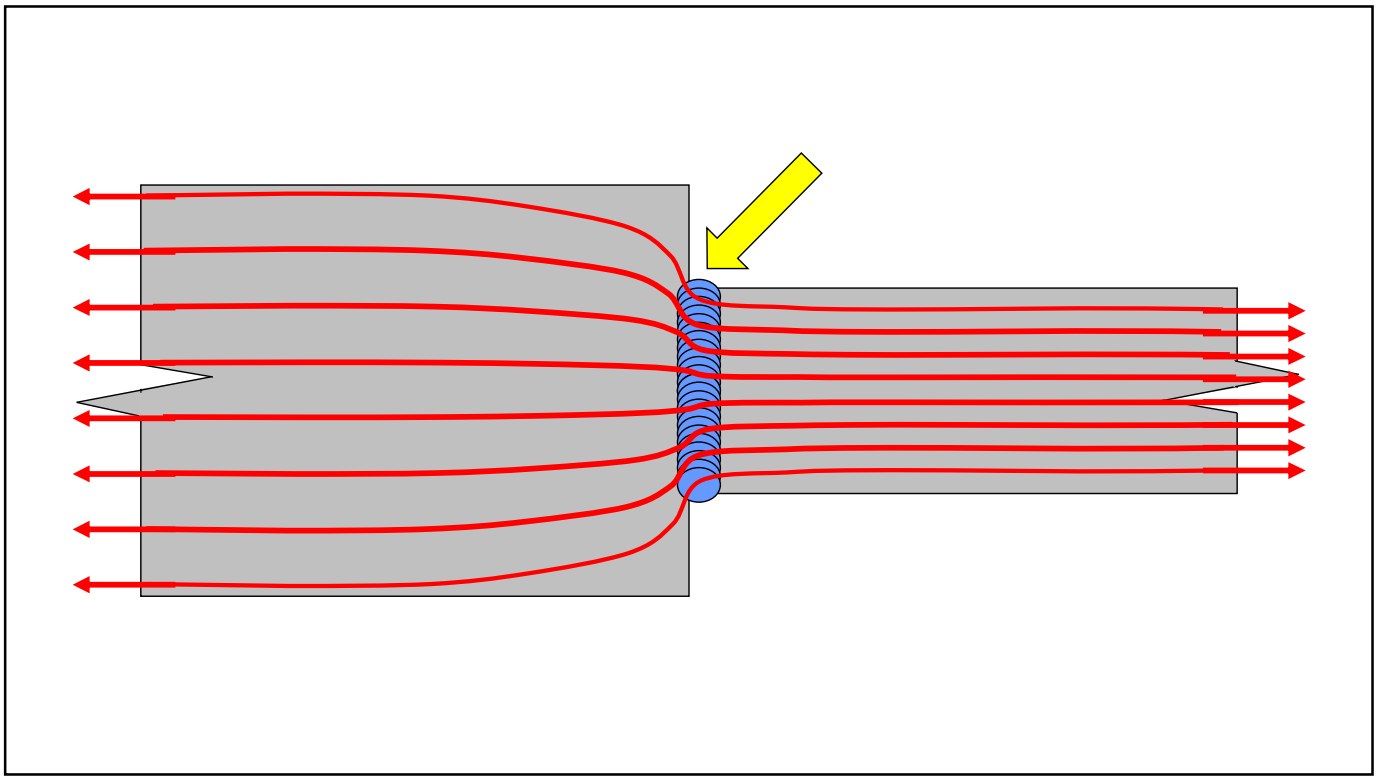

185

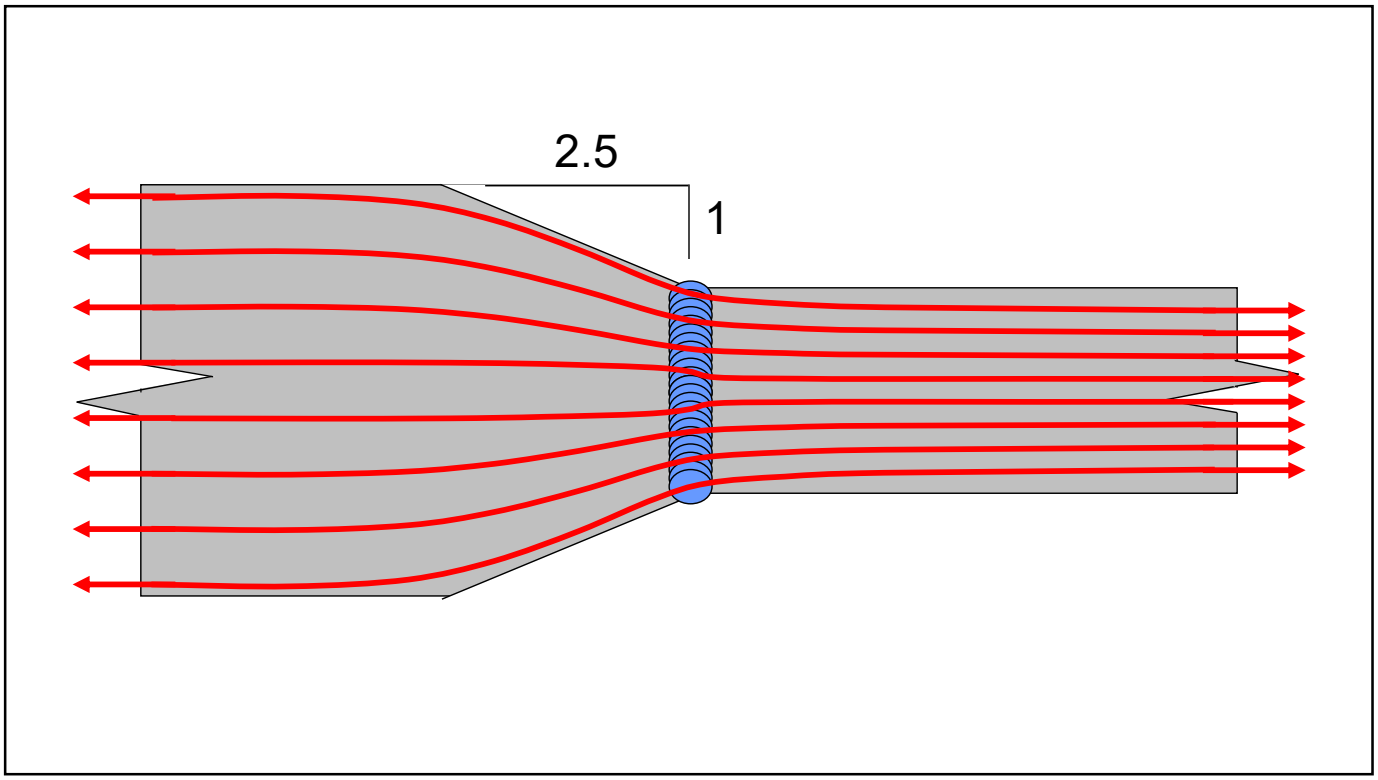

186

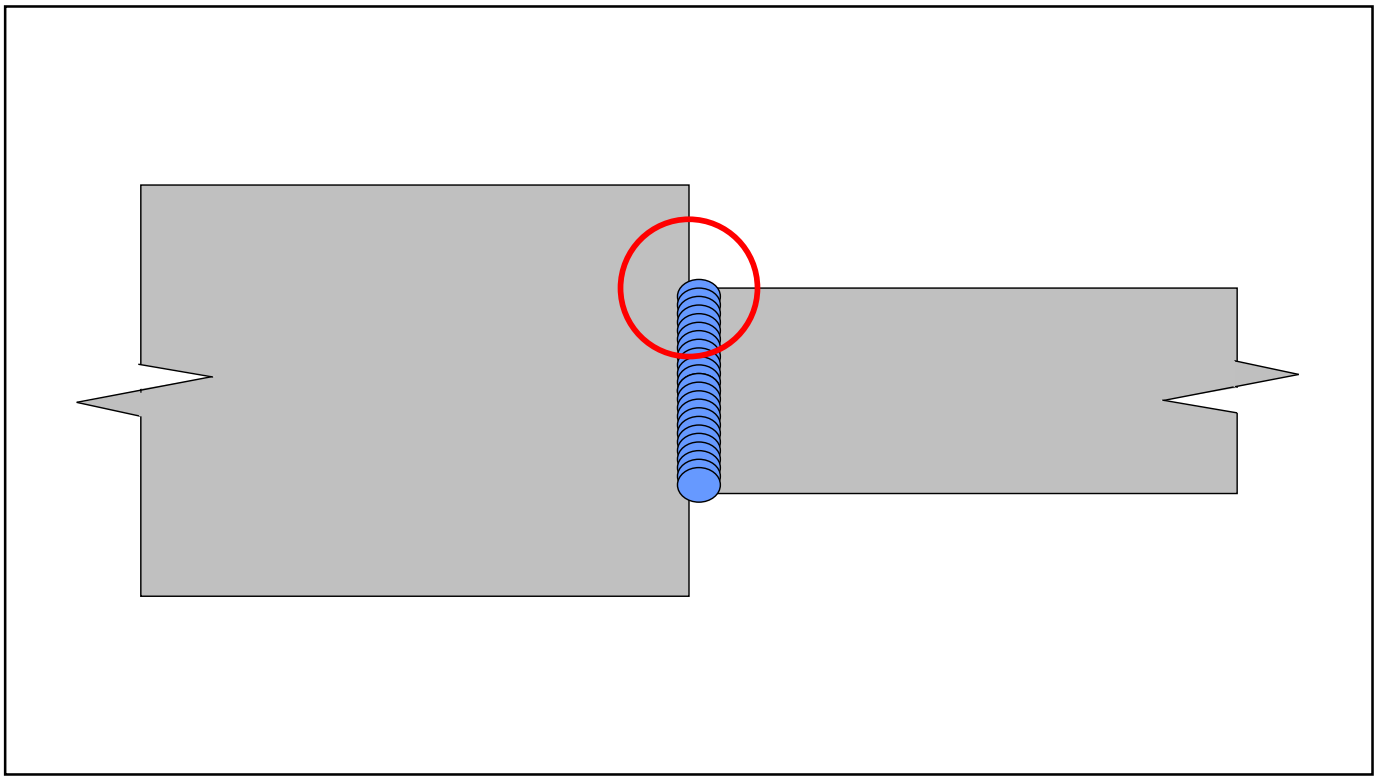

187

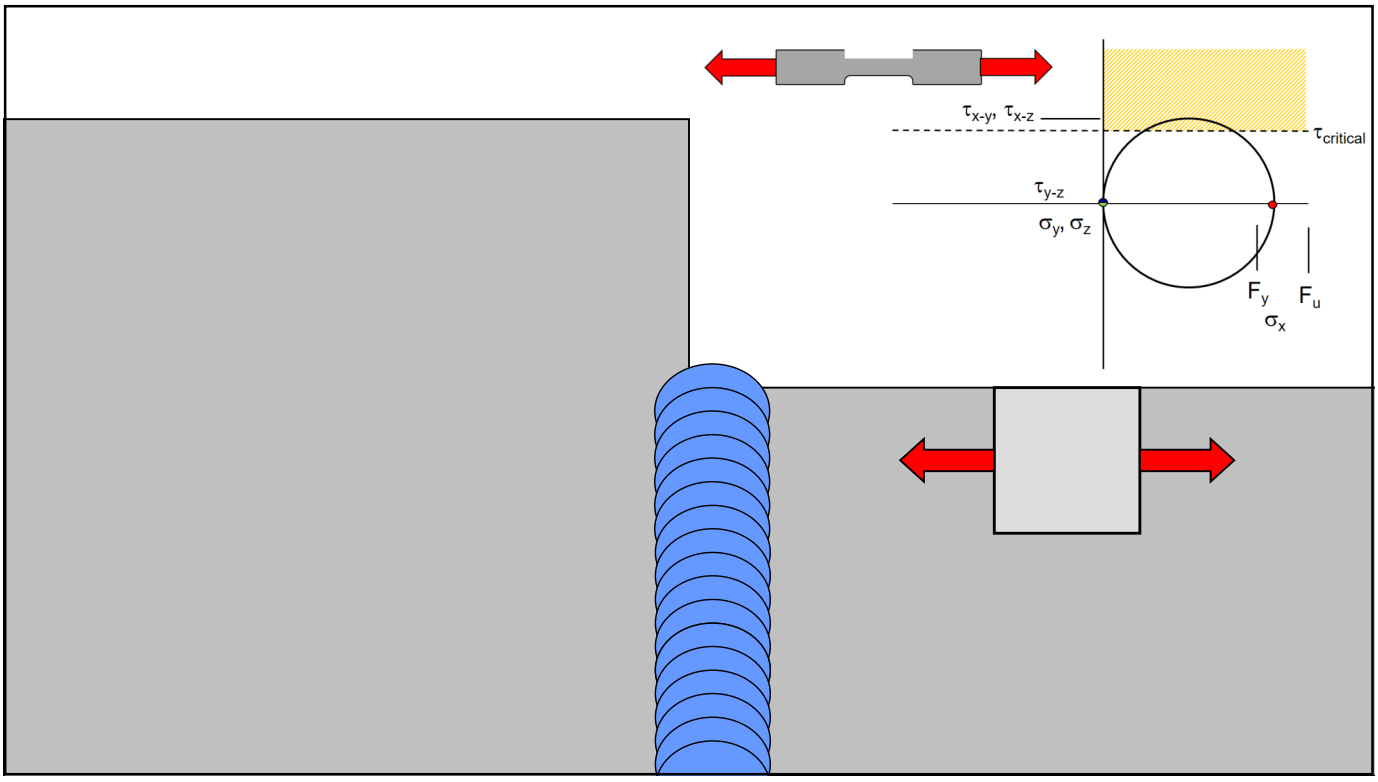

188

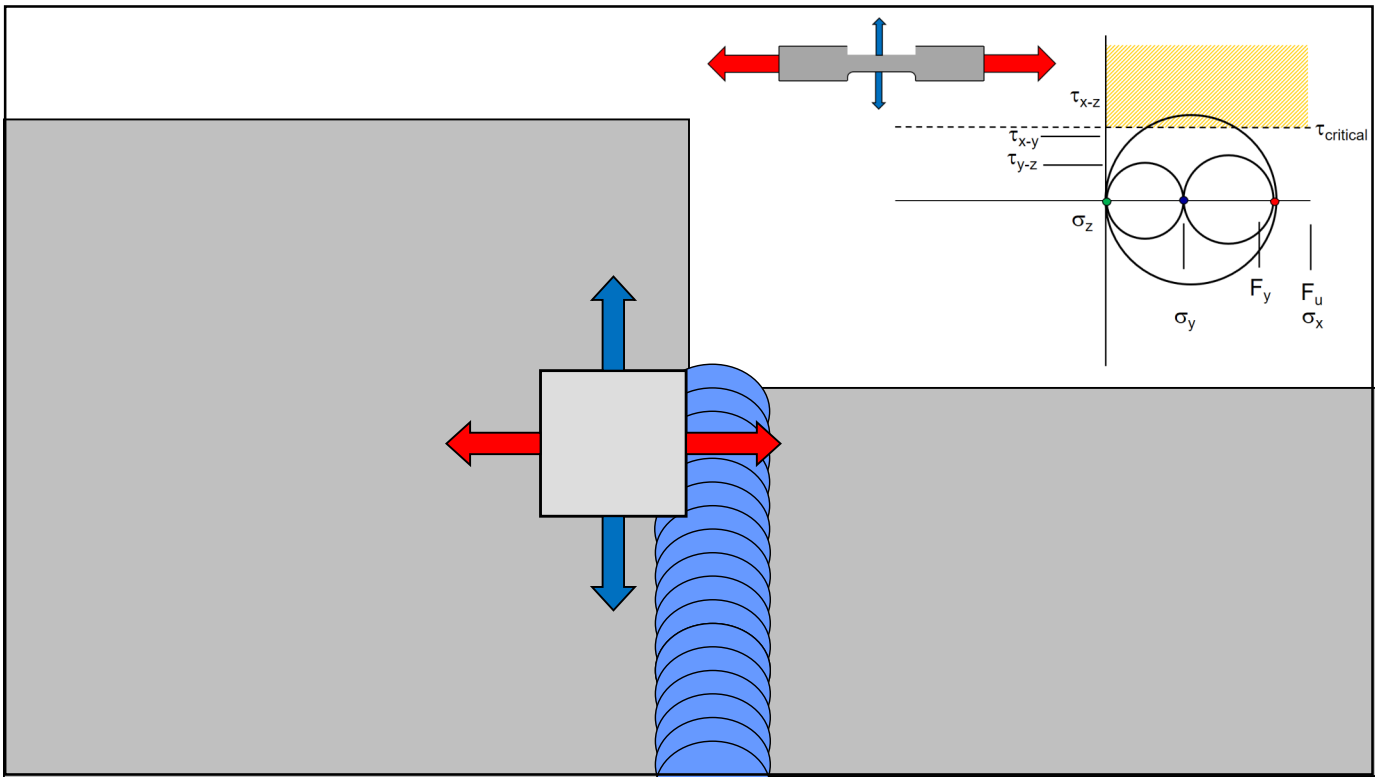
τx-z
τcritical
τx-y
τy-z
σz
Fy
Fu
σx
σy

189

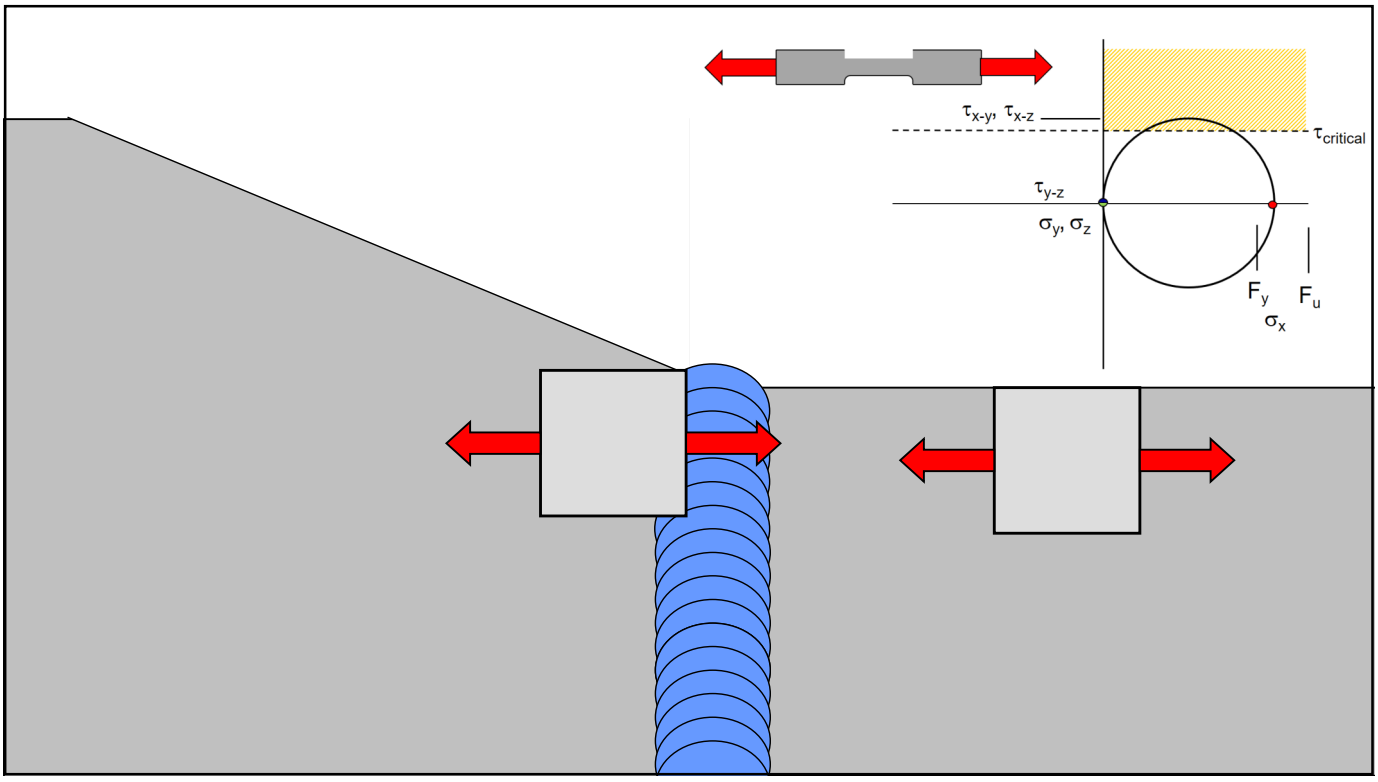
τx-y, τx-z
τcritical
τy-z
σy, σz
Fy
Fu
σx

190



191

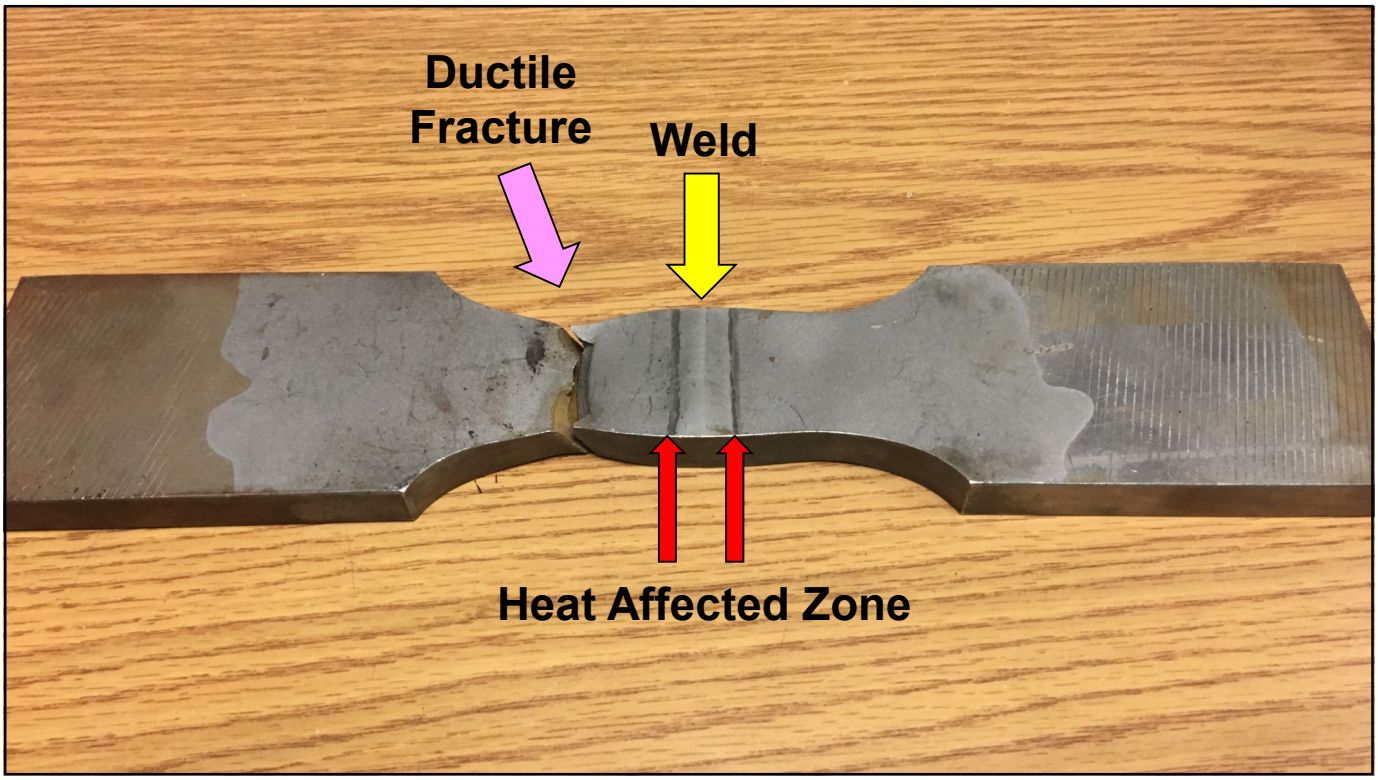

192

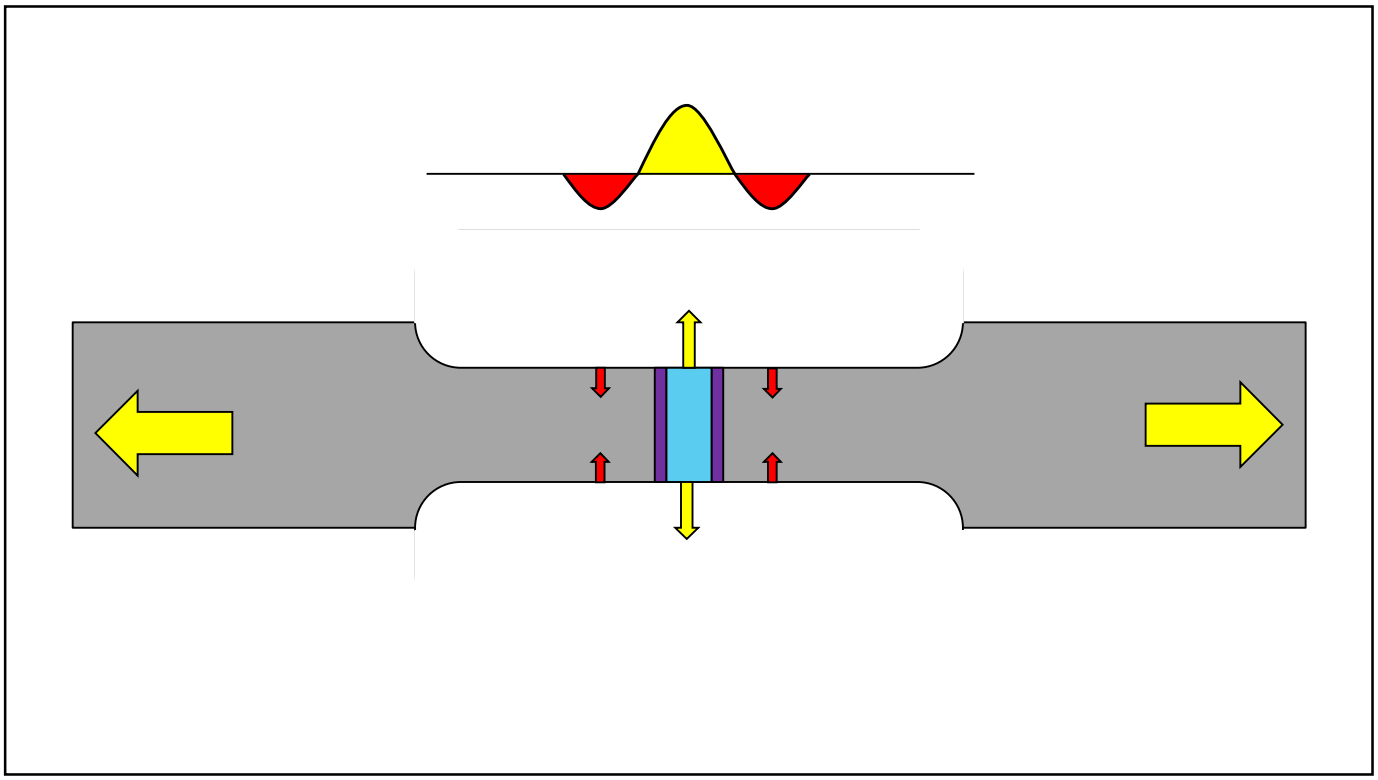

193

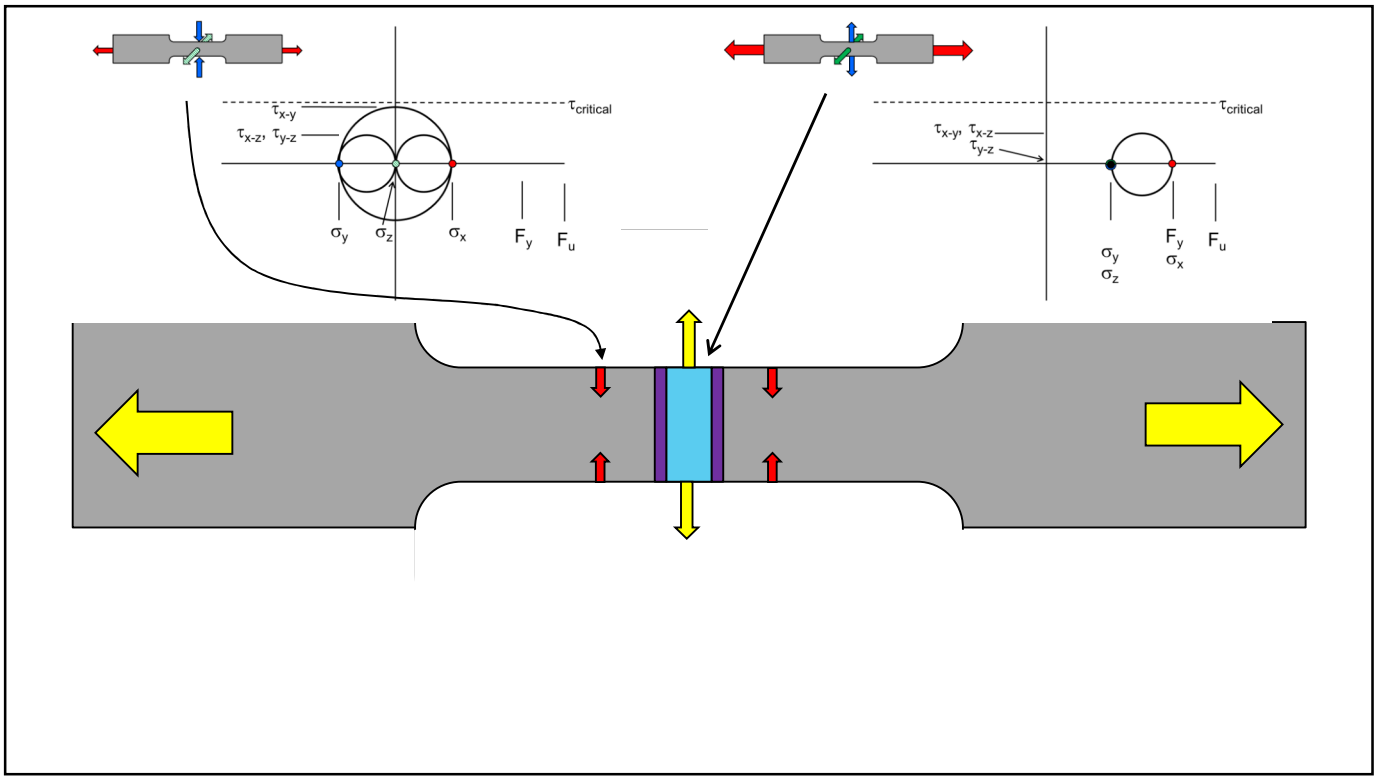
τx-y
τx-z, τy-z
τcritical
σy
σz
σx
Fy
Fu
τx-y, τx-z
τy-z
τcritical
σy
σz
Fy
σx
Fu

194

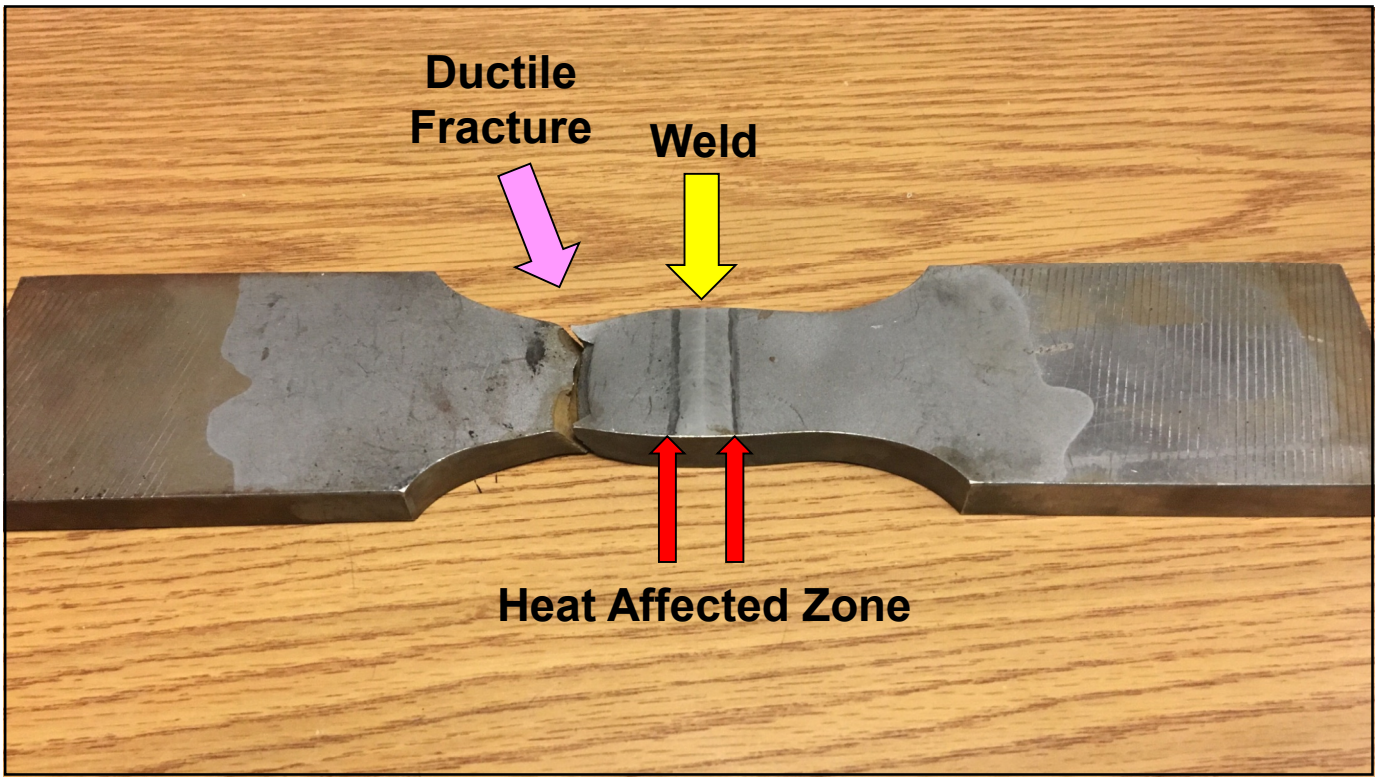

195

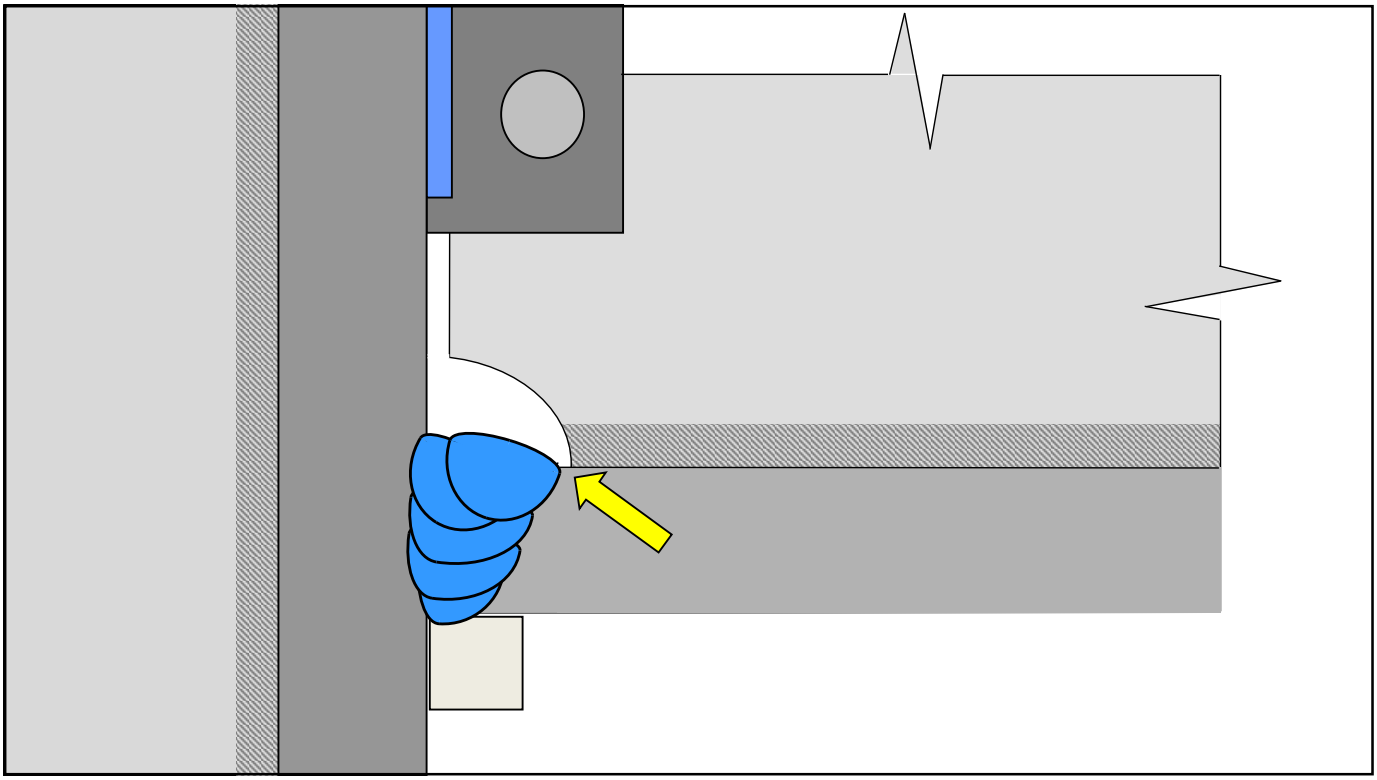

196

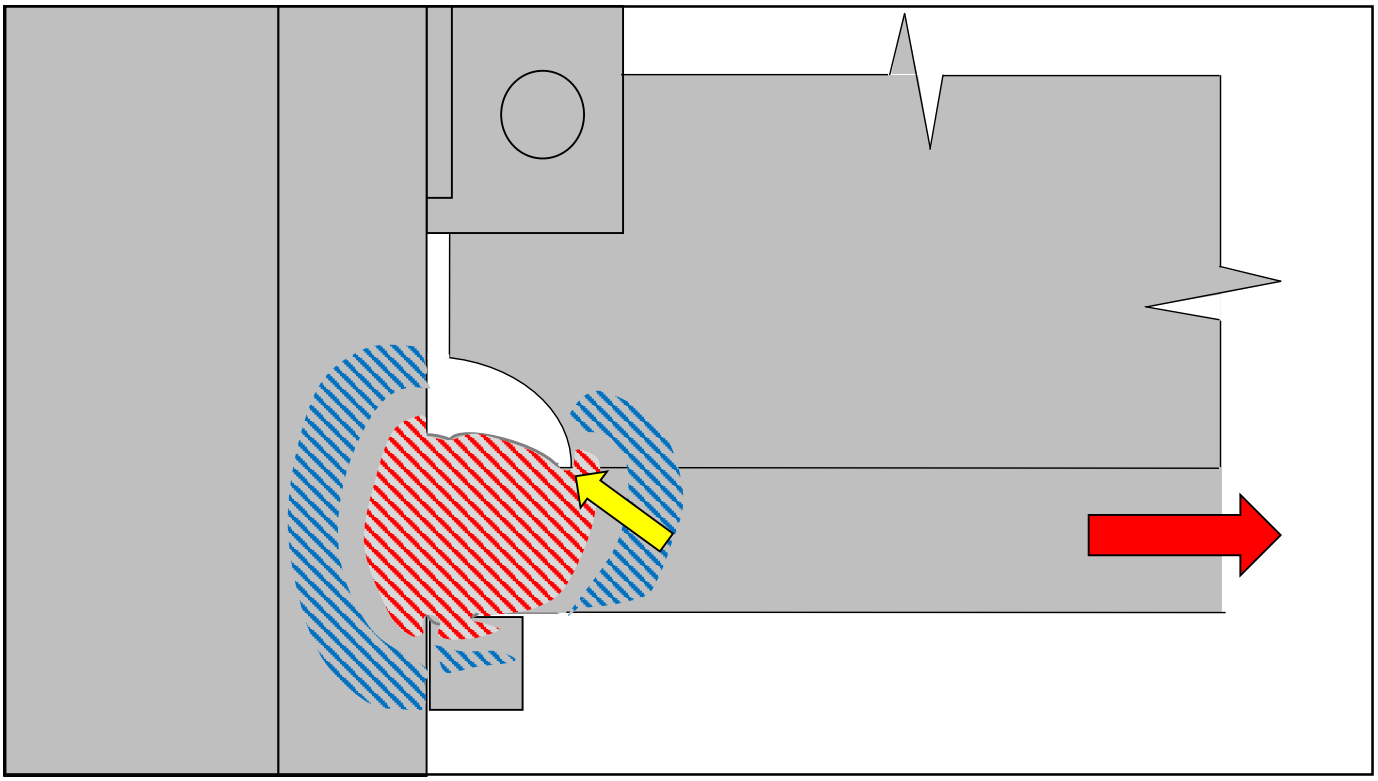

197

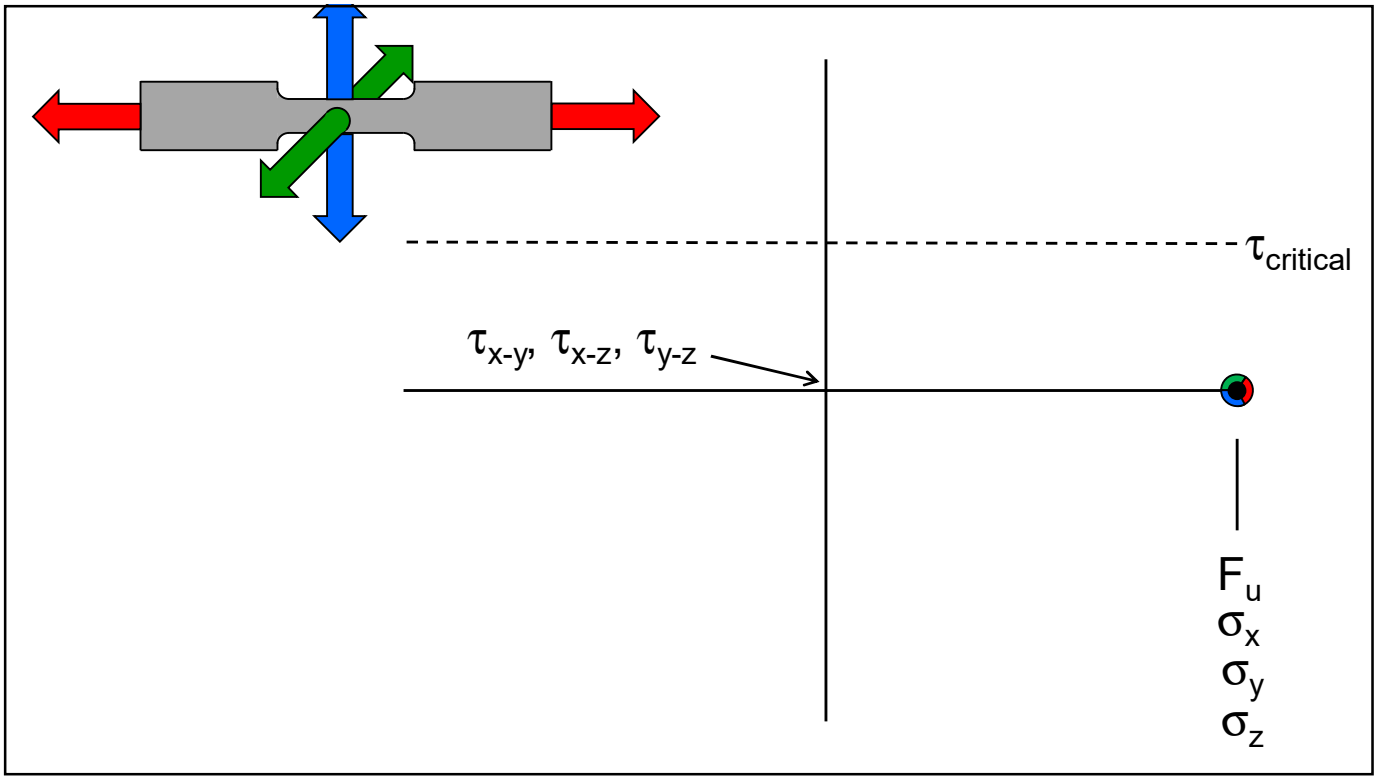

198

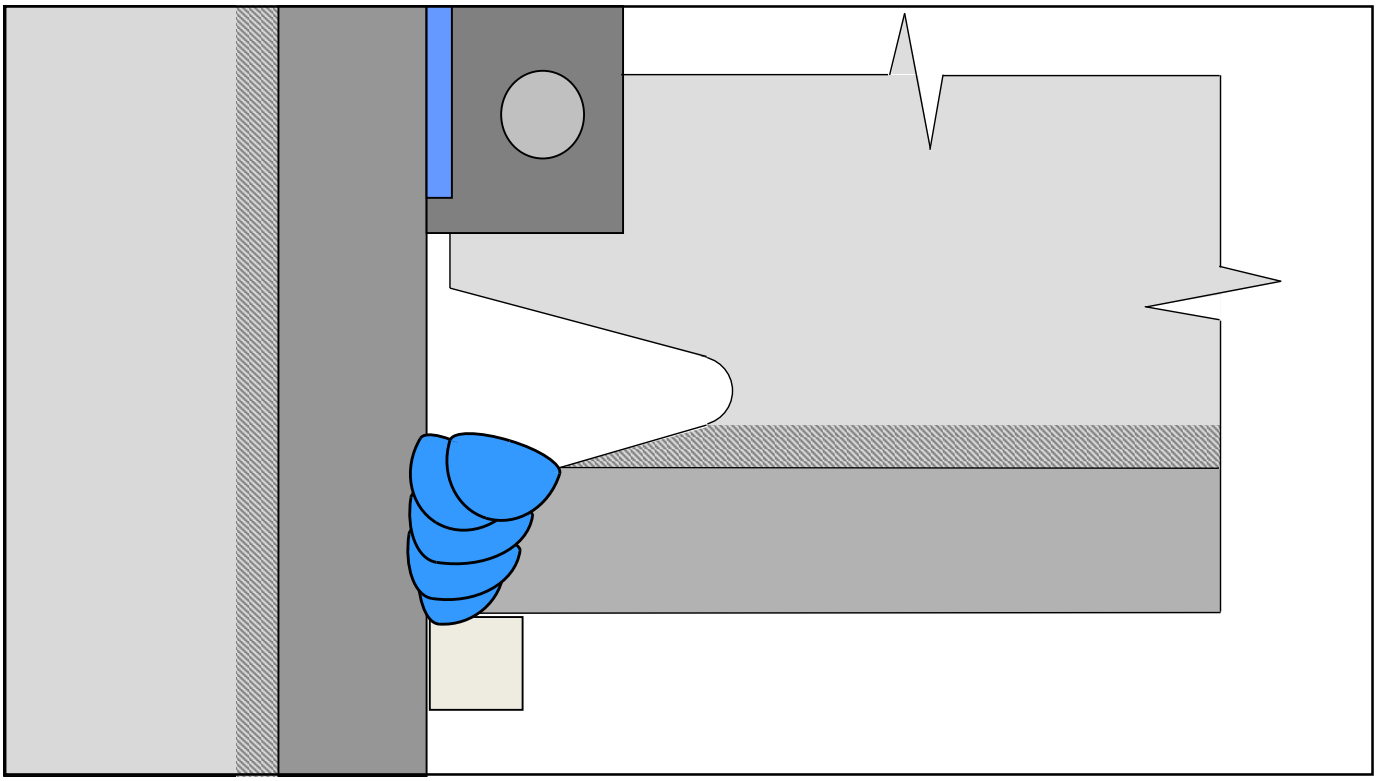

199

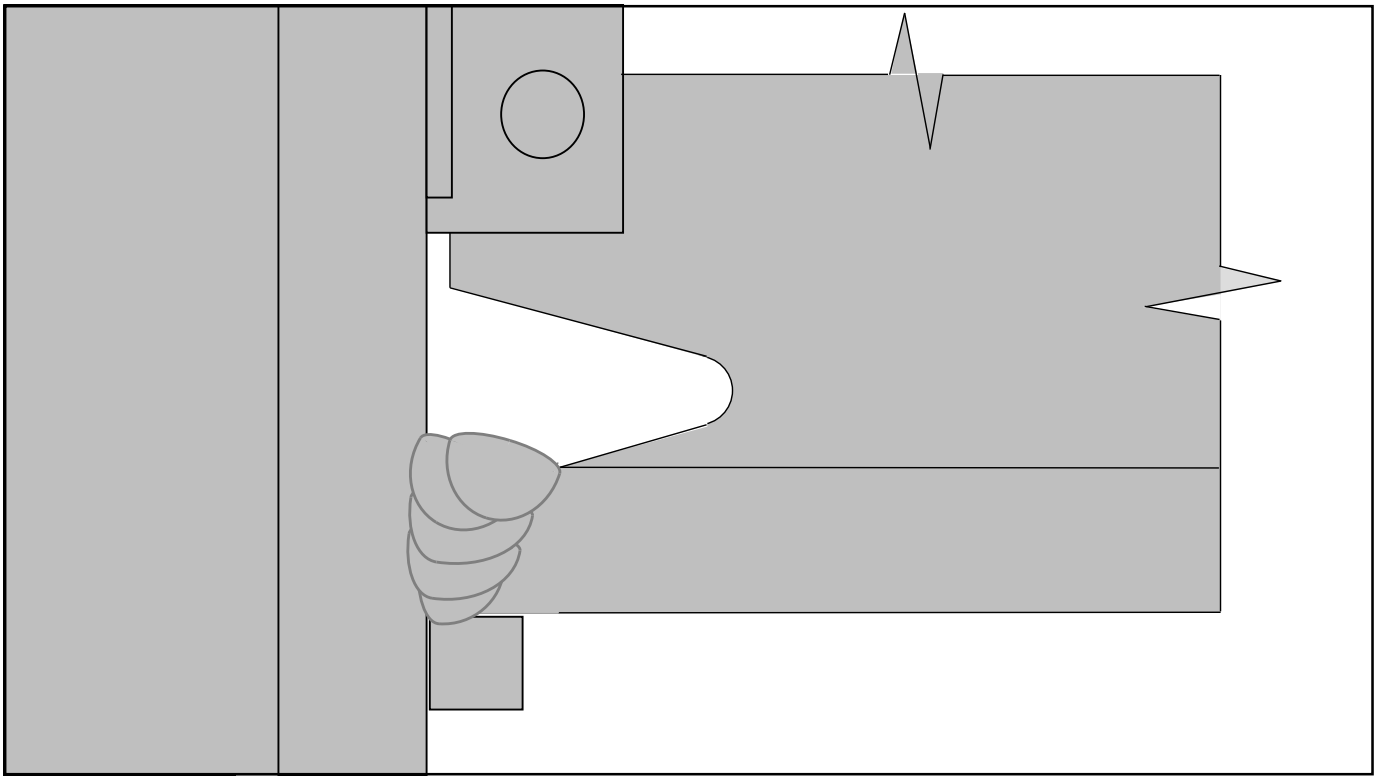

200

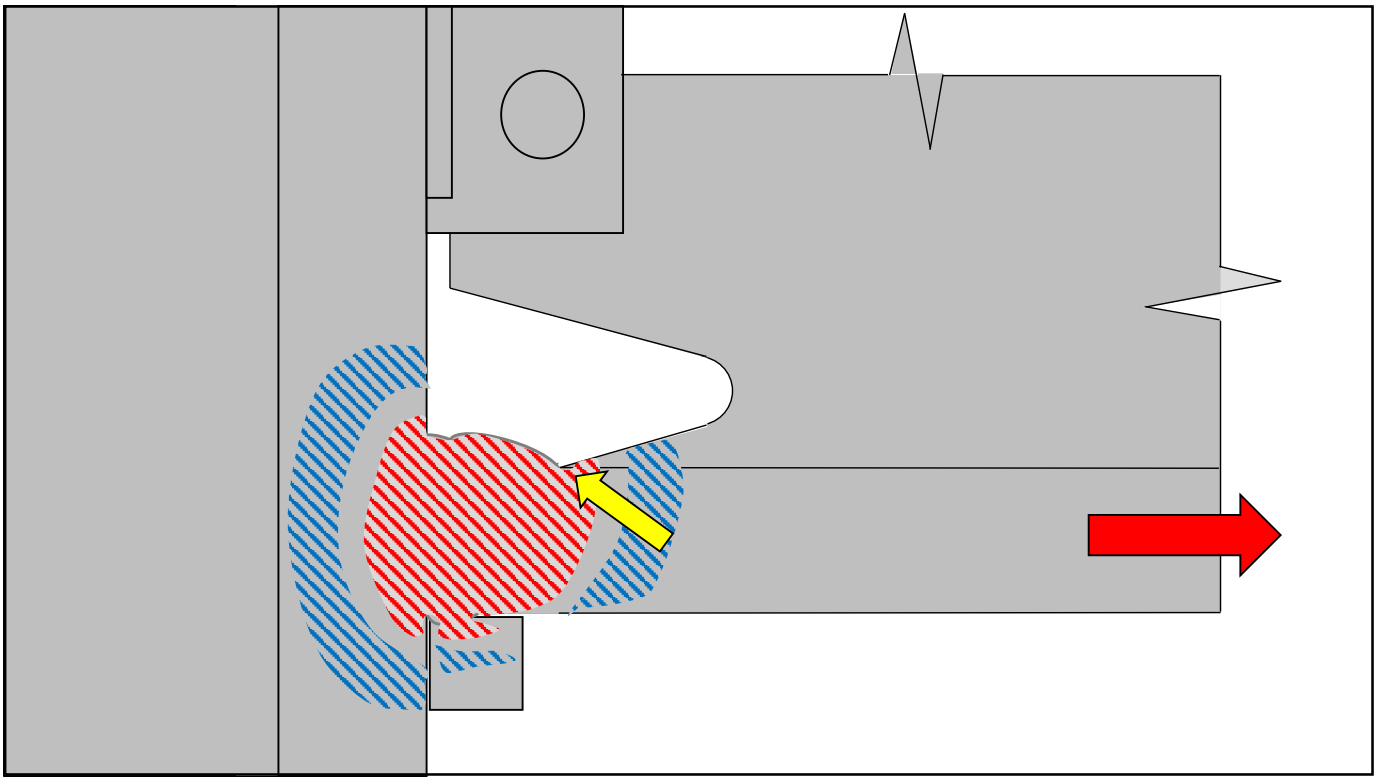

201

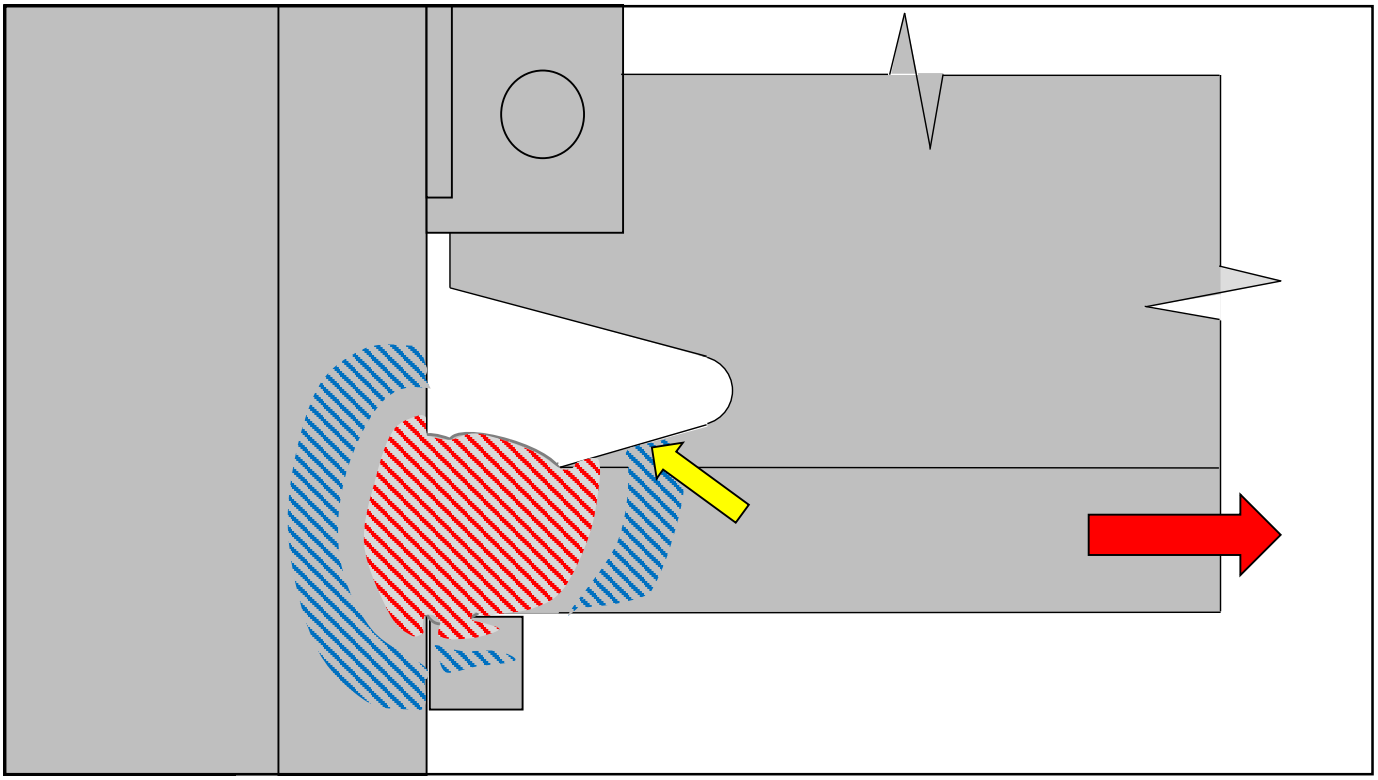

202

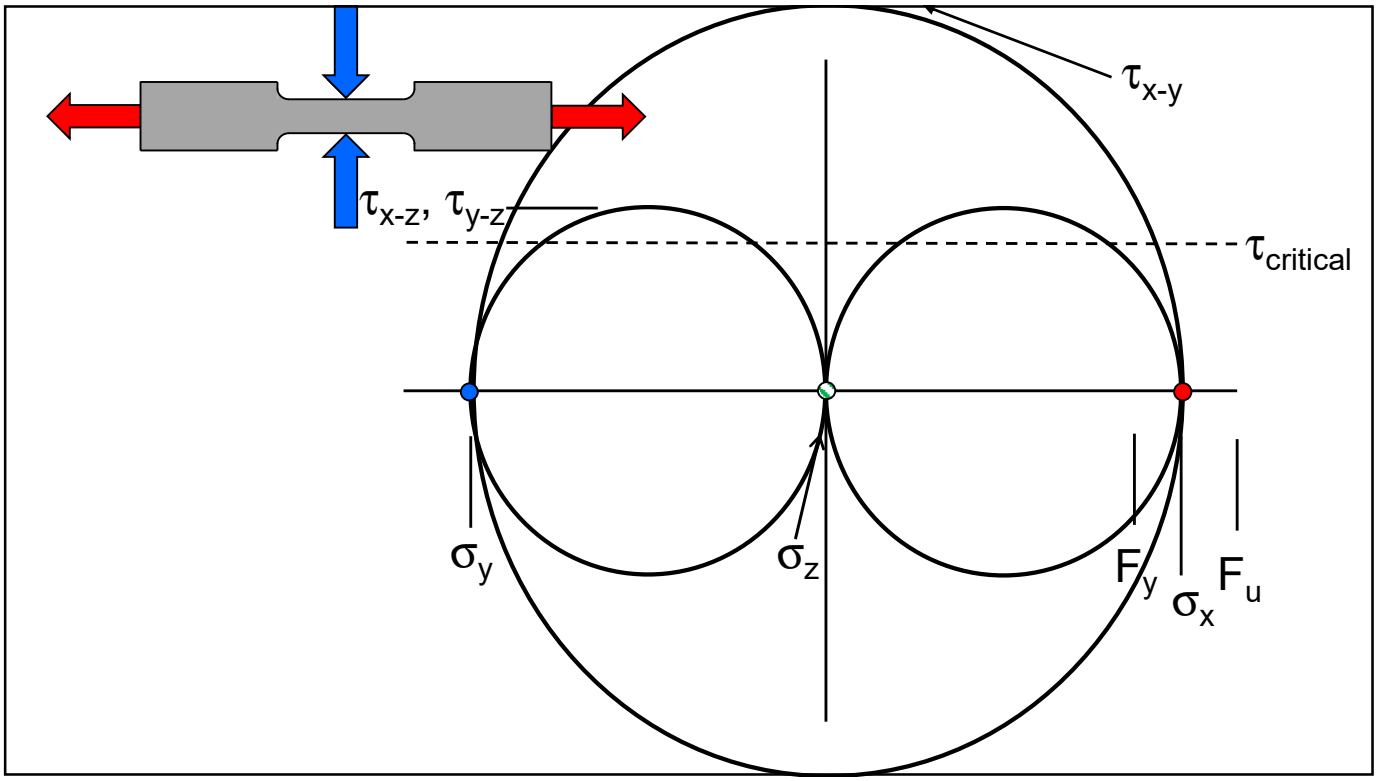

203

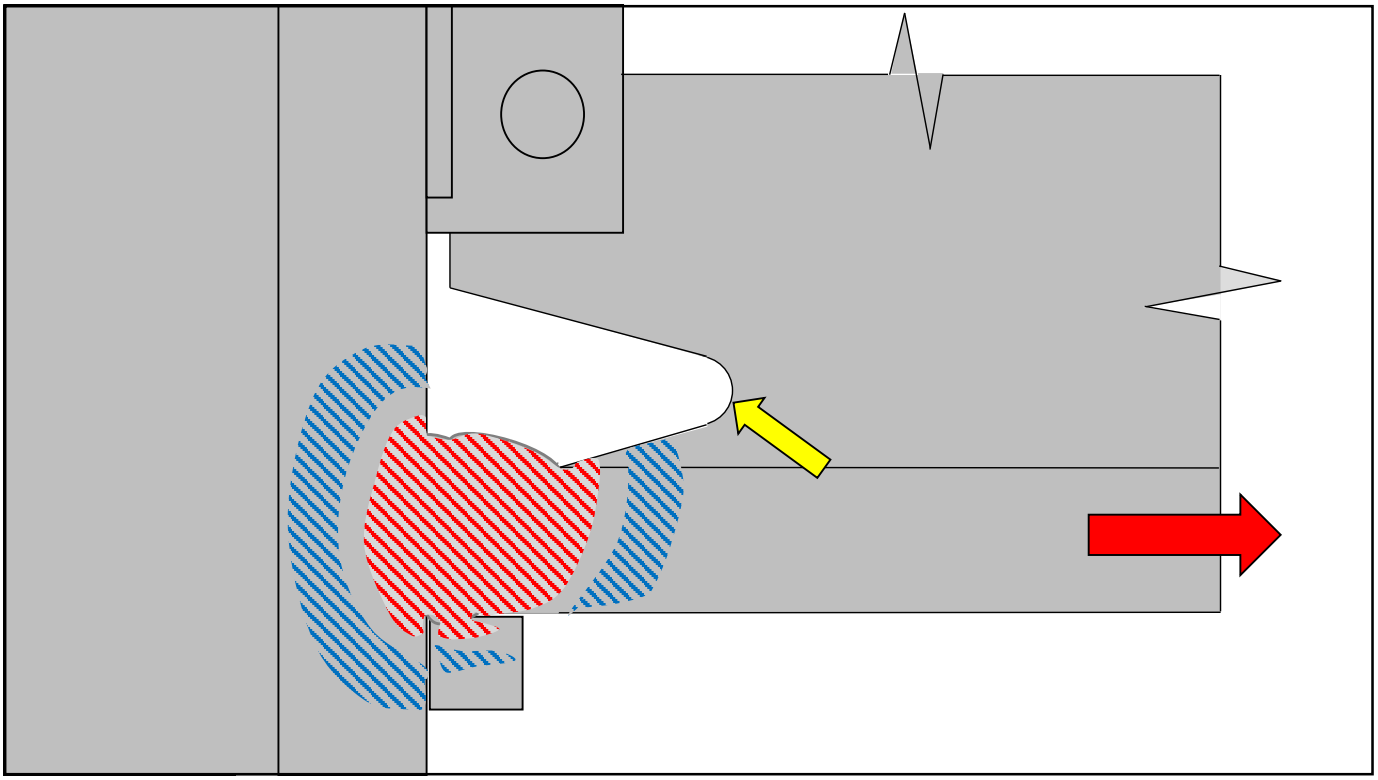

204

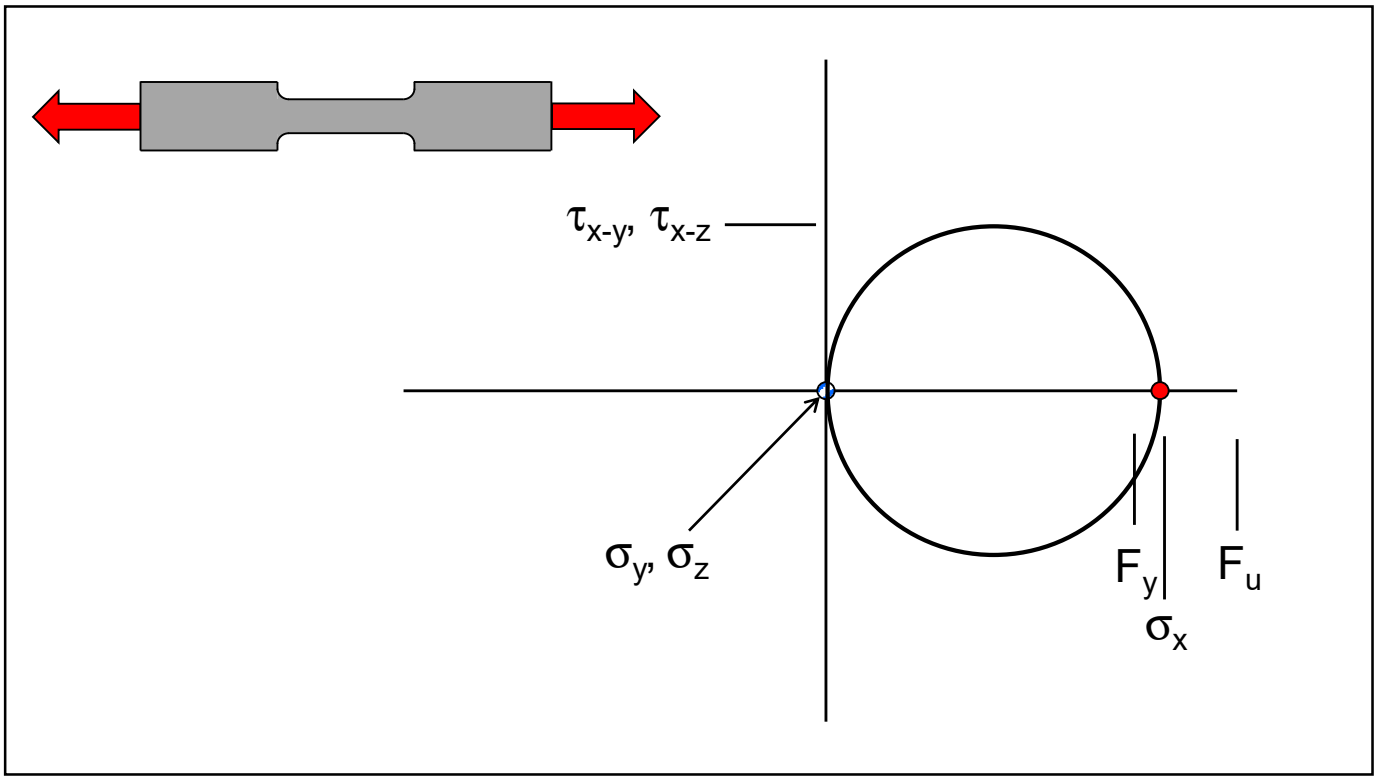
τ_{x-y}, τ_{x-z}
σ_y, σ_z
F_y
F_u
σ_x

205

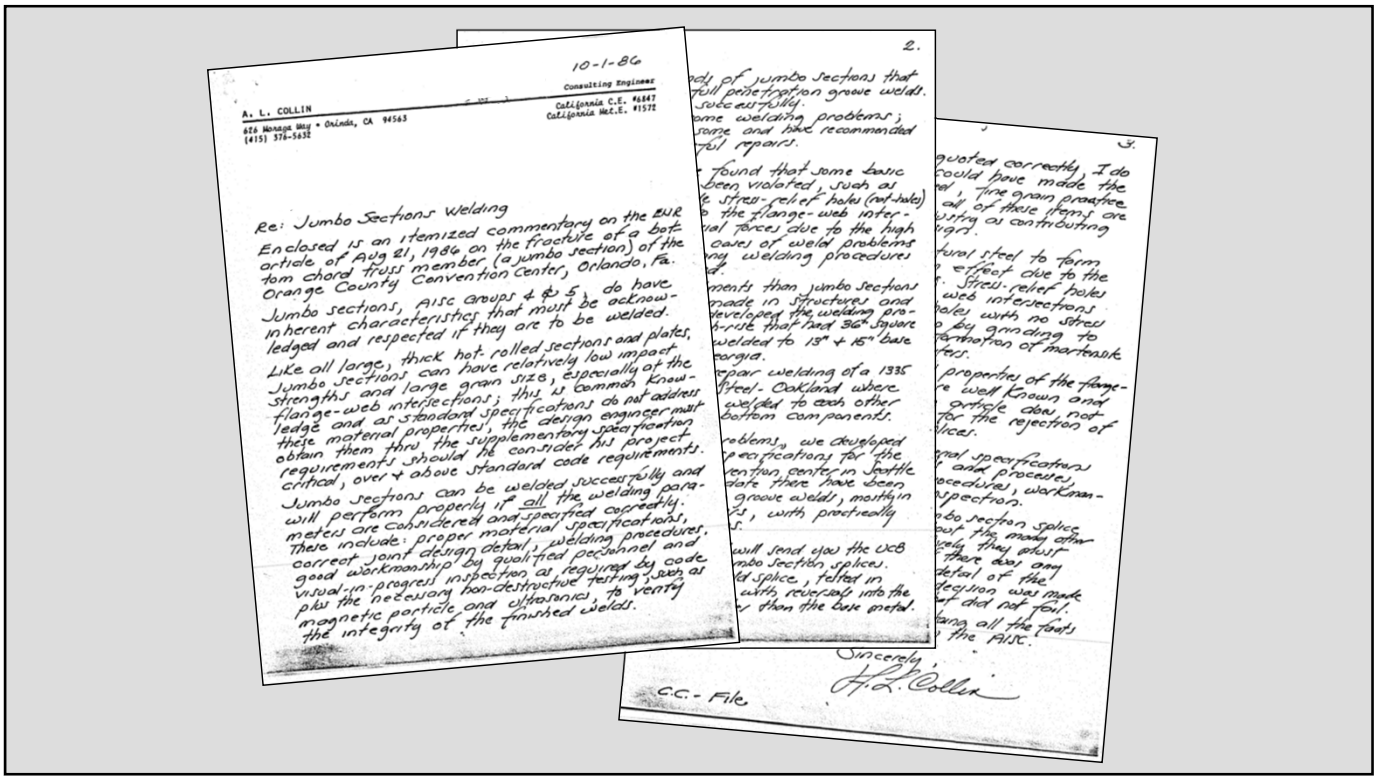
10-1-86
Consulting Engineer
A. L. COLLIN
626 Monroe Way • Orinda, CA 94563
(415) 376-5632
California C.E. #6847
California Met.E. #1572
Re: Jumbo Sections Welding
Enclosed is an itemized commentary on the EUR article of Aug 21, 1986 on the fracture of a bottom chord truss member (a jumbo section) of the Orange County Convention Center, Orlando, Fla.
Jumbo sections, AISC groups 4 & 5, do have inherent characteristics that must be acknowledged and respected if they are to be welded.
Like all large, thick hot-rolled sections and plates, Jumbo sections can have relatively low impact strengths and large grain size, especially at the flange-web intersections; this is common knowledge and as standard specifications do not address these material properties, the design engineer must obtain them thru the supplementary specification requirements should the consider this project critical, over & above standard code requirements.
Jumbo sections can be welded successfully and will perform properly if all the welding parameters are considered and specified correctly. These include: proper material specifications, correct joint design detail, welding procedures, good workmanship by qualified personnel and visual-in-progress inspection as required by code plus the necessary non-destructive testing, such as magnetic particle and ultrasonics, to verify the integrity of the finished welds.
Sincerely,
H. L. Collin
cc - File
2.
3.

206

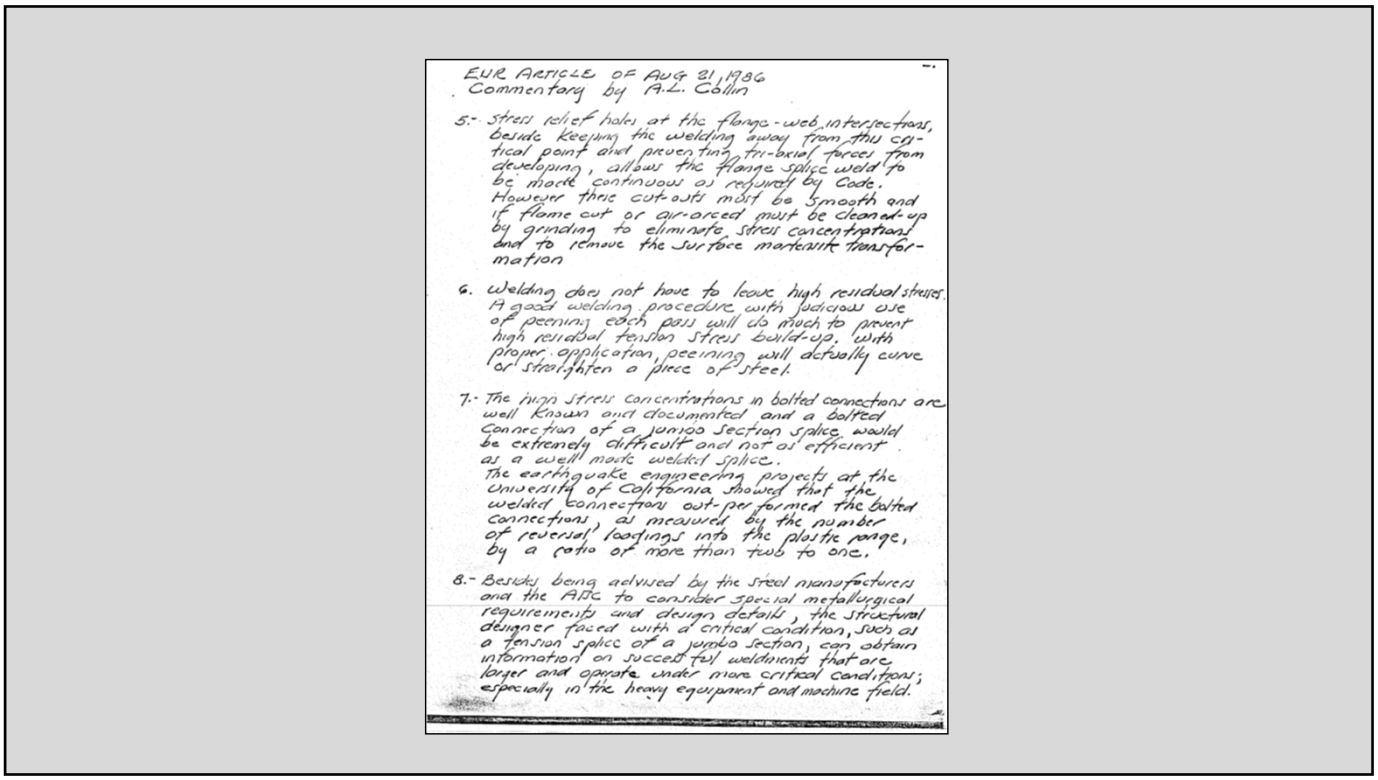

EUR ARTICLE OF AUG 21, 1986
Commentary by A.L. Collin

5.- Stress relief holes at the flange-web intersections, beside keeping the welding away from this critical point and preventing tri-axial forces from developing, allows the flange splice weld to be made continuous as required by Code. However these cut-outs must be smooth and if flame cut or air-arced must be cleaned-up by grinding to eliminate stress concentrations and to remove the surface martensite transformation

6. Welding does not have to leave high residual stresses. A good welding procedure with judicious use of peening each pass will do much to prevent high residual tension stress build-up. With proper application peening will actually curve or straighten a piece of steel.

7.- The high stress concentrations in bolted connections are well known and documented and a bolted connection of a jumbo section splice would be extremely difficult and not as efficient as a well made welded splice.
The earthquake engineering projects at the University of California showed that the welded connections out-performed the bolted connections, as measured by the number of reversal loadings into the plastic range, by a ratio of more than two to one.

8.- Besides being advised by the steel manufacturers and the AISC to consider special metallurgical requirements and design details, the structural designer faced with a critical condition, such as a tension splice of a jumbo section, can obtain information on succesful weldments that are larger and operate under more critical conditions; especially in the heavy equipment and machine field.

207

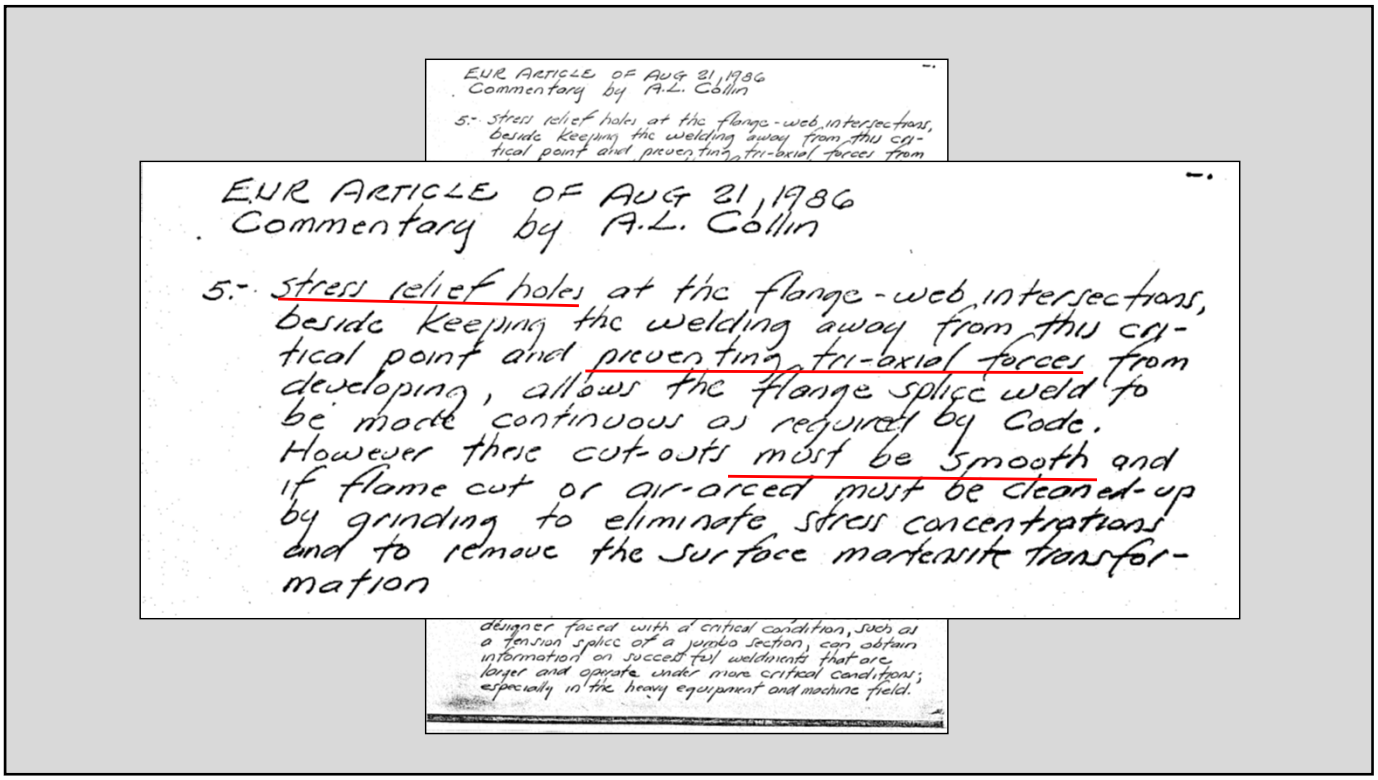

EUR ARTICLE OF AUG 21, 1986
Commentary by A.L. Collin

5.- Stress relief holes at the flange-web intersections, beside keeping the welding away from this critical point and preventing tri-axial forces from developing, allows the flange splice weld to be made continuous as required by Code. However these cut-outs must be smooth and if flame cut or air-arced must be cleaned-up by grinding to eliminate stress concentrations and to remove the surface martensite transformation

designer faced with a critical condition, such as a tension splice of a jumbo section, can obtain information on succesful weldments that are larger and operate under more critical conditions; especially in the heavy equipment and machine field.

208

Another need for ductility: welding depends on it.

209

$$\Delta L = \frac{PL}{AE} \qquad \Delta L = \frac{50(10)}{1(30E3)} = 0.016 \text{ in } (0.16\ \%)$$

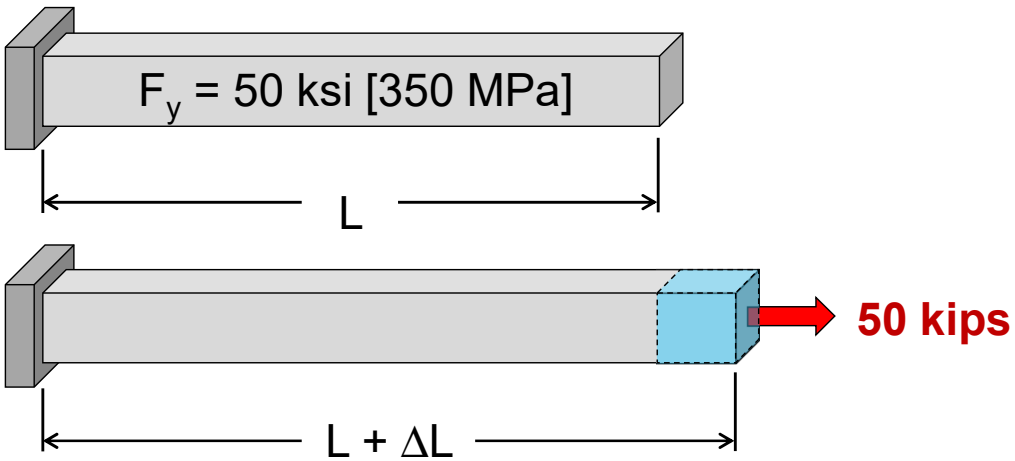

210

$\Delta L = L(\Delta T)C_{exp}$ $\Delta L = 10(2795 - 70)(6.6E-6) = 0.18$ in (1.8 %)

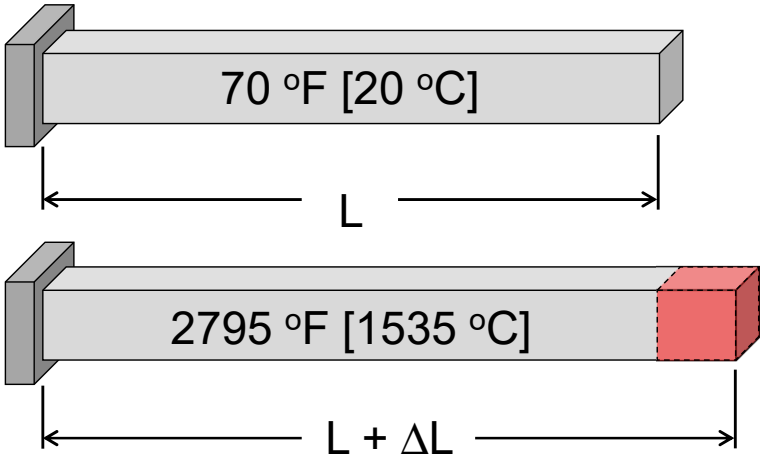

211

Thermal elongation = 10X yield point elongation

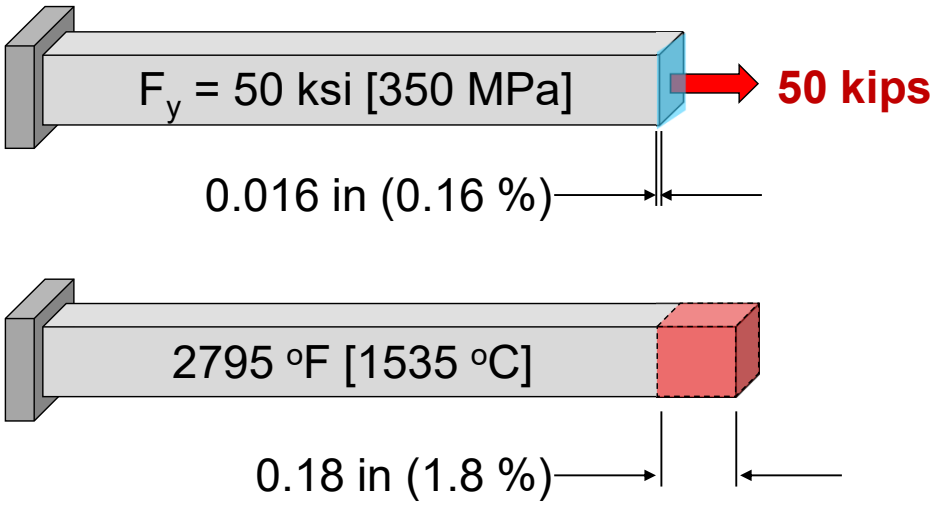

212

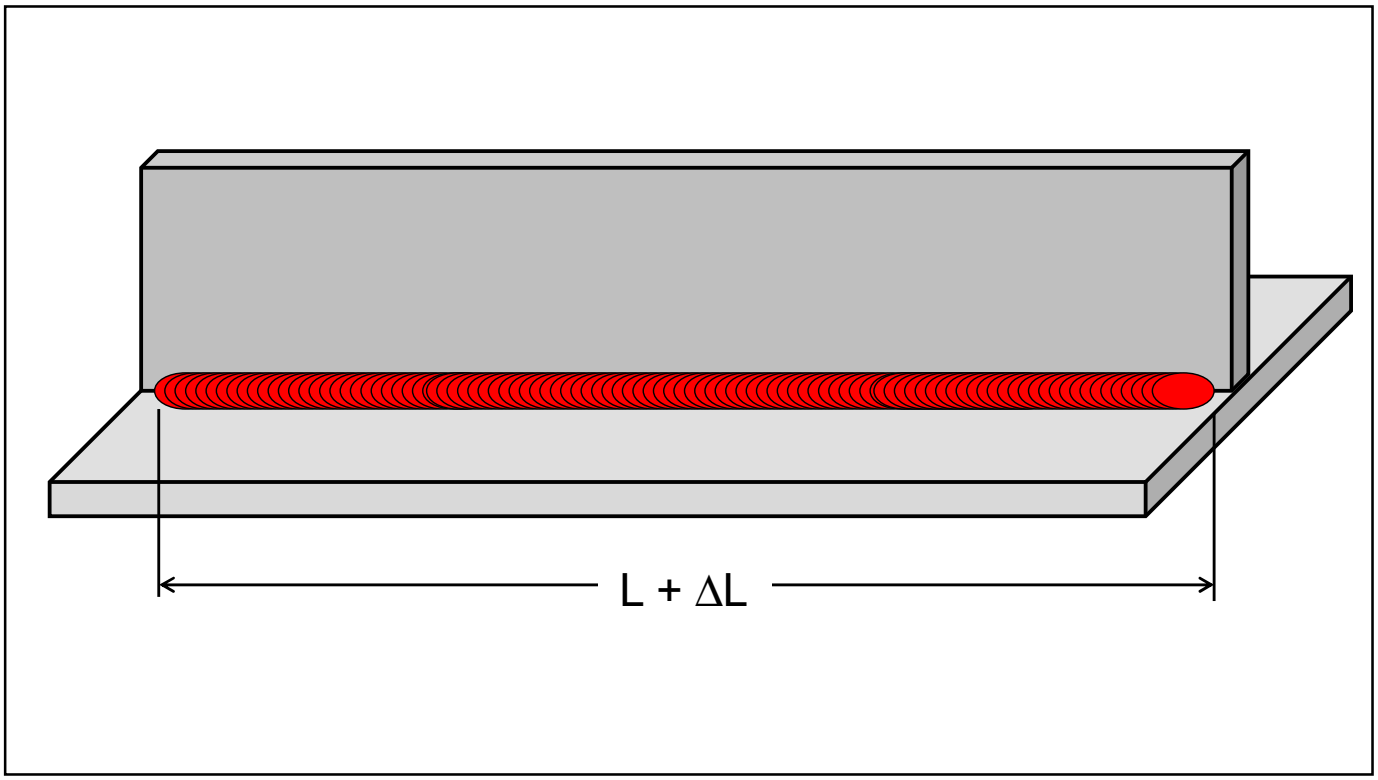

213

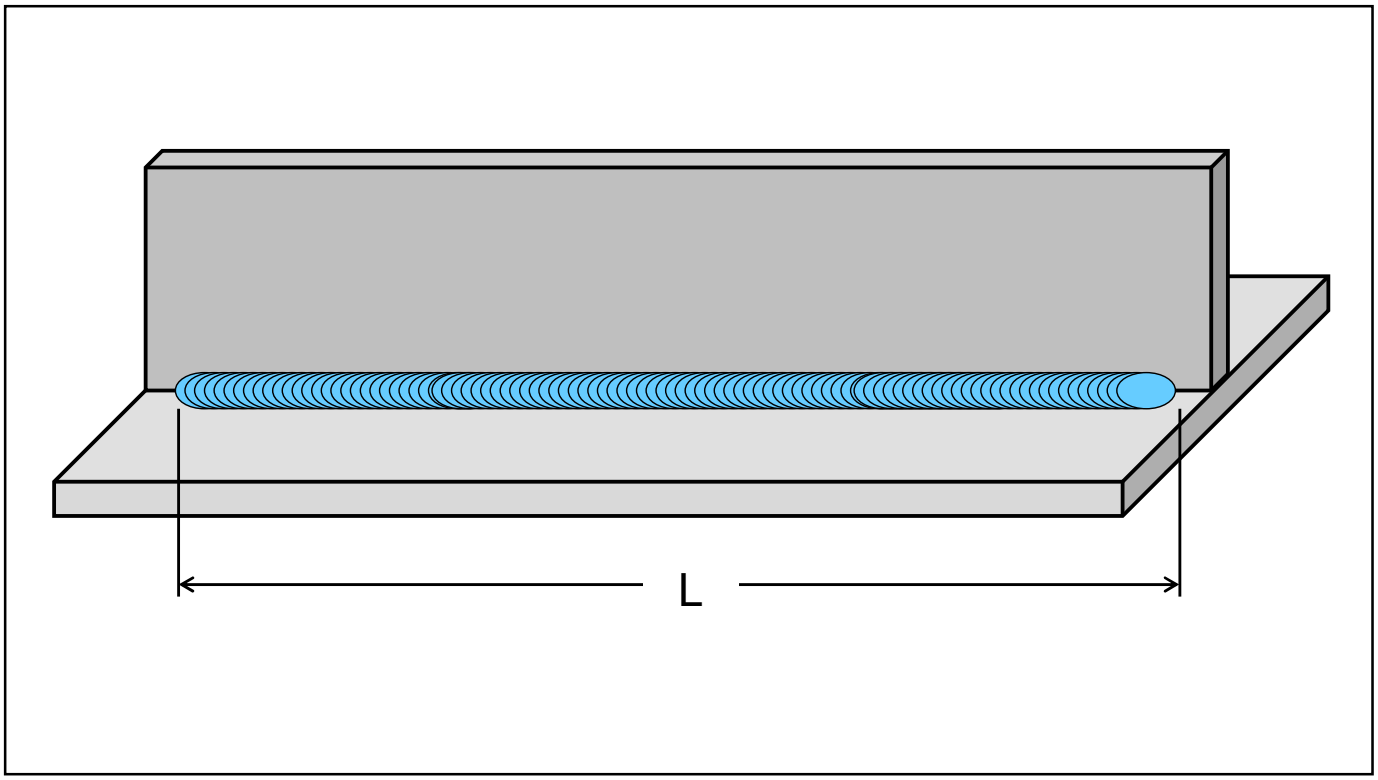

214

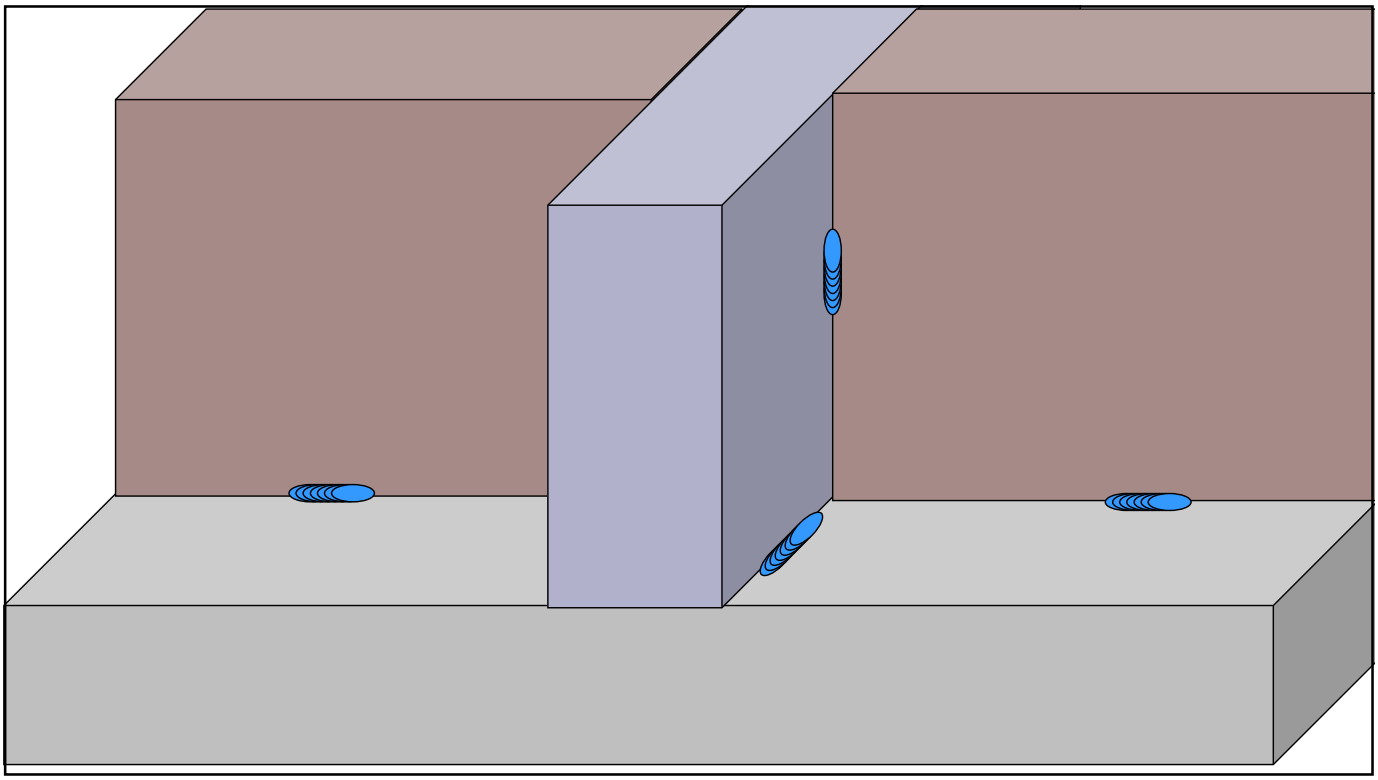

215

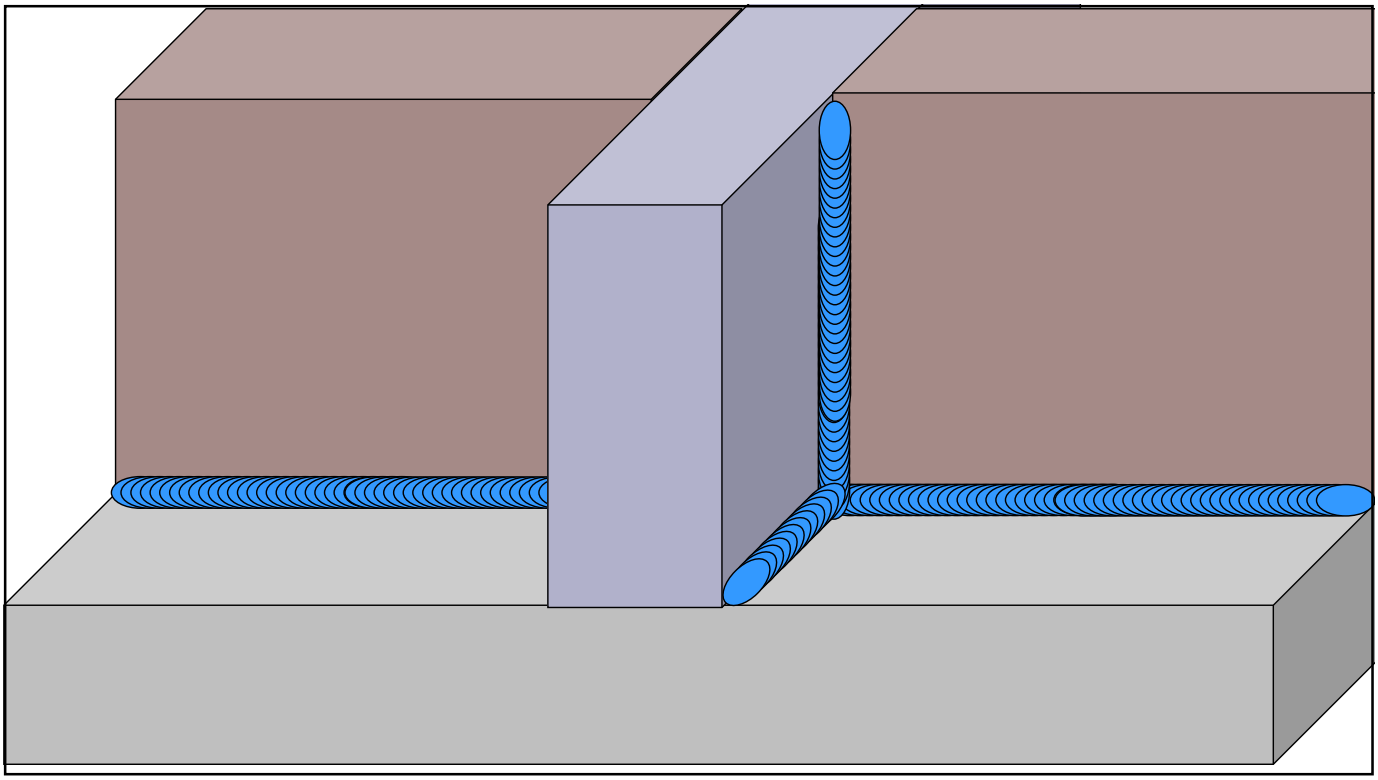

216

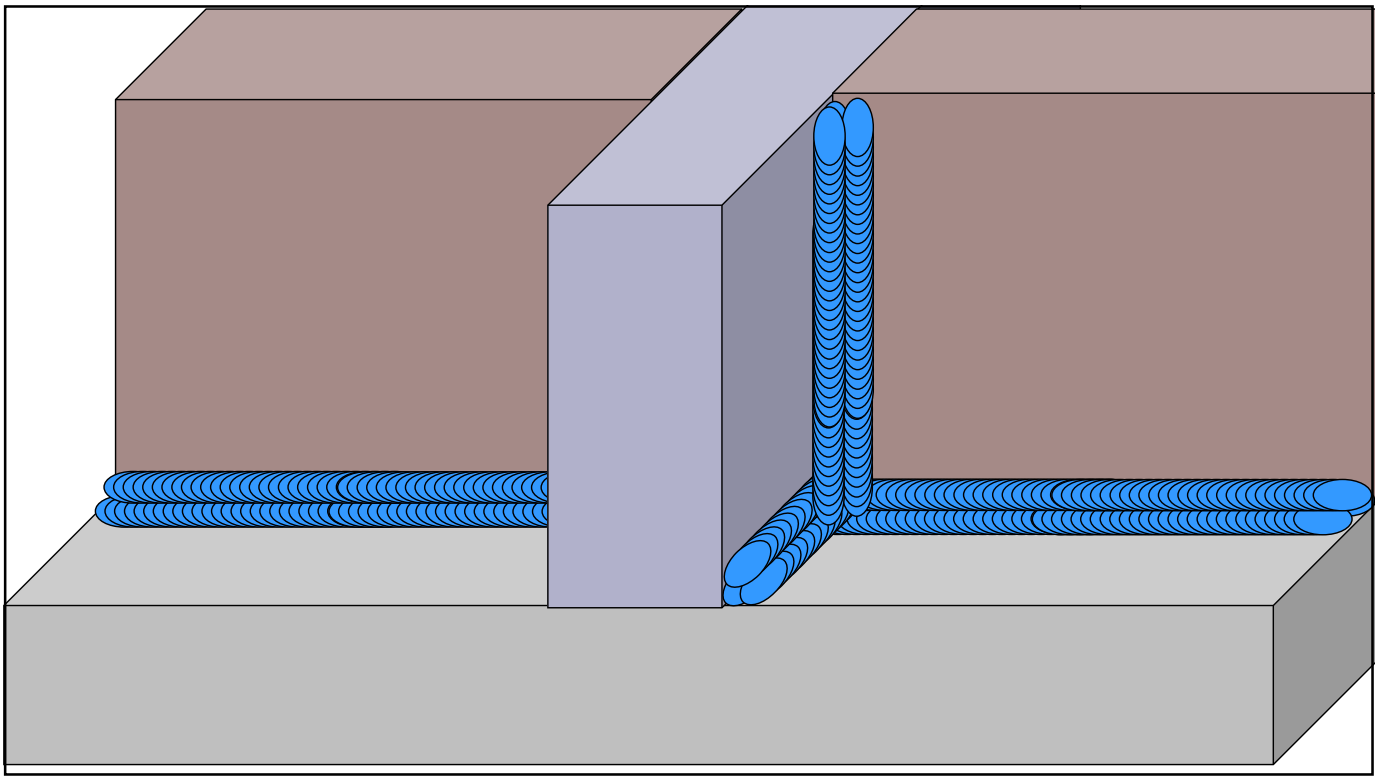

217

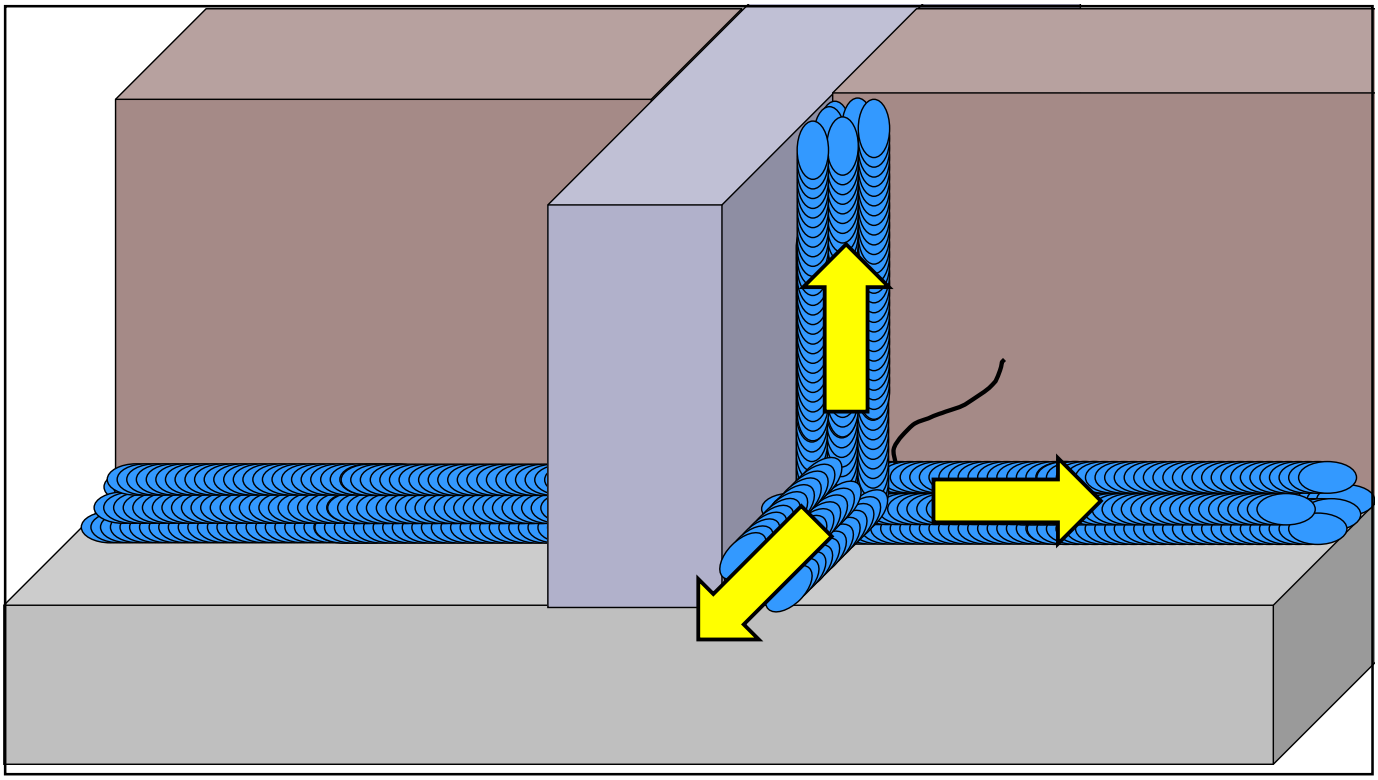

218

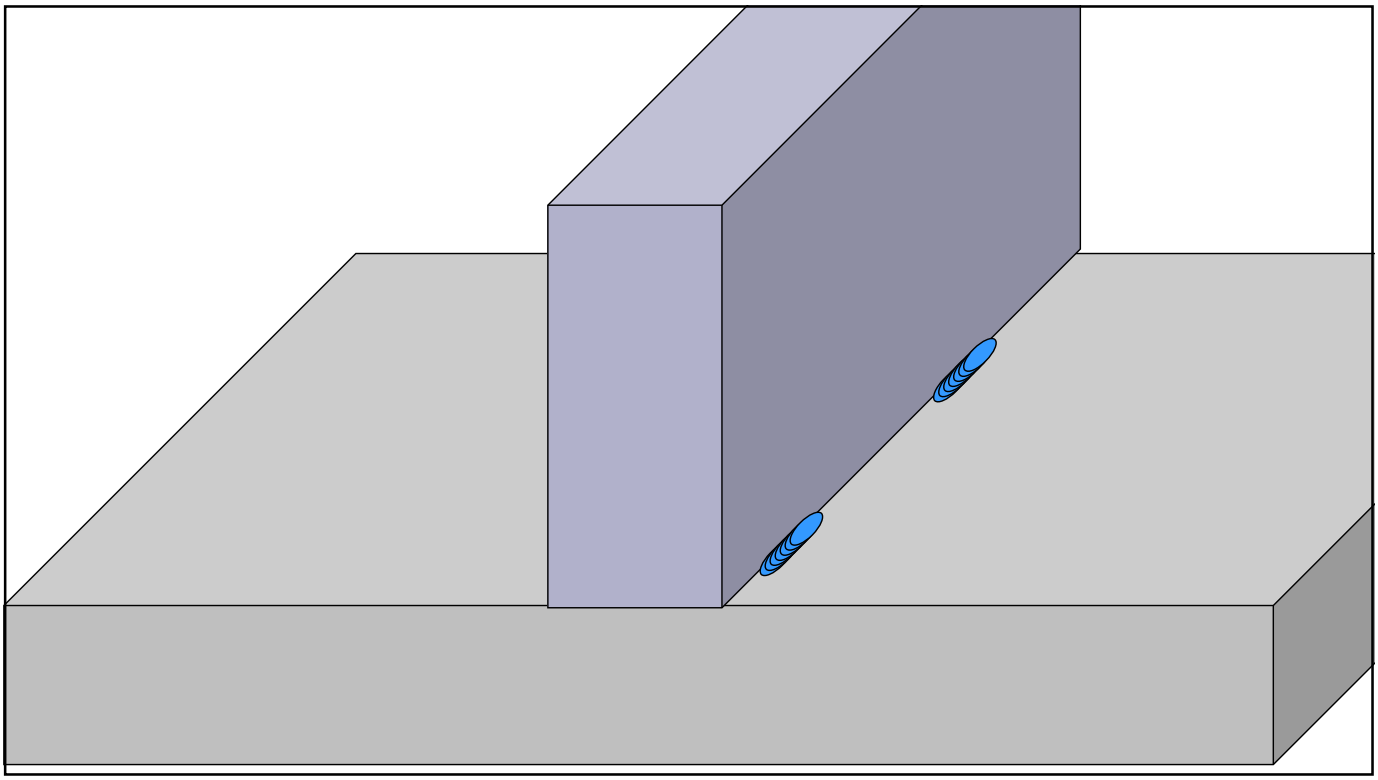

219

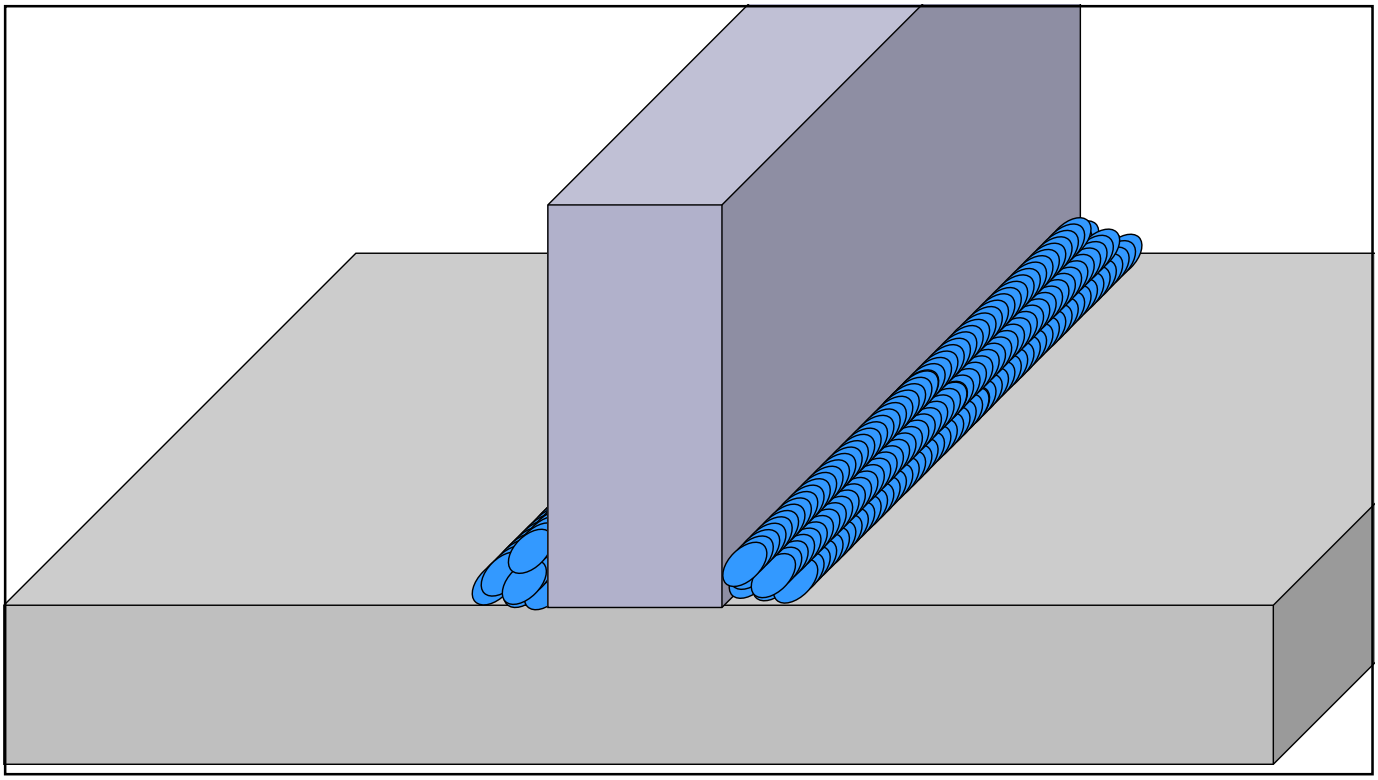

220

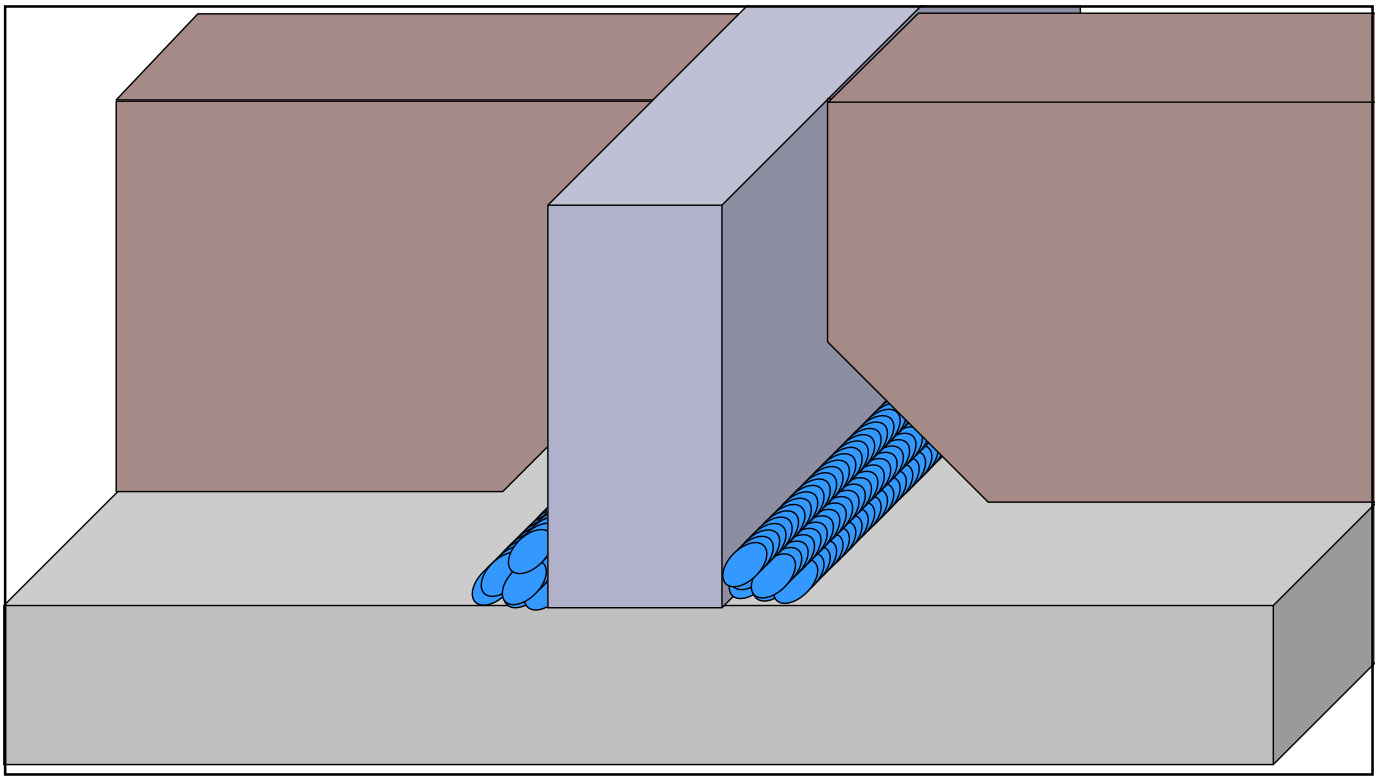

221

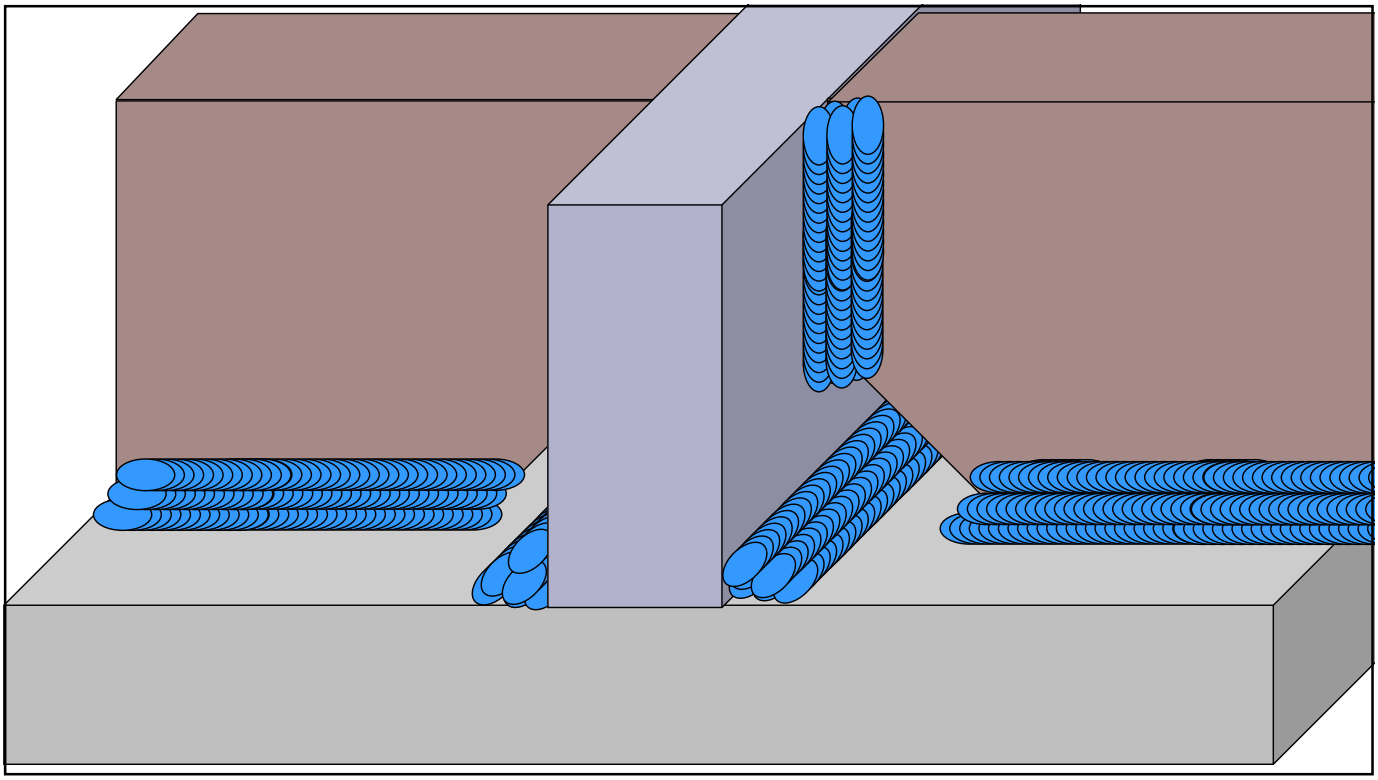

222

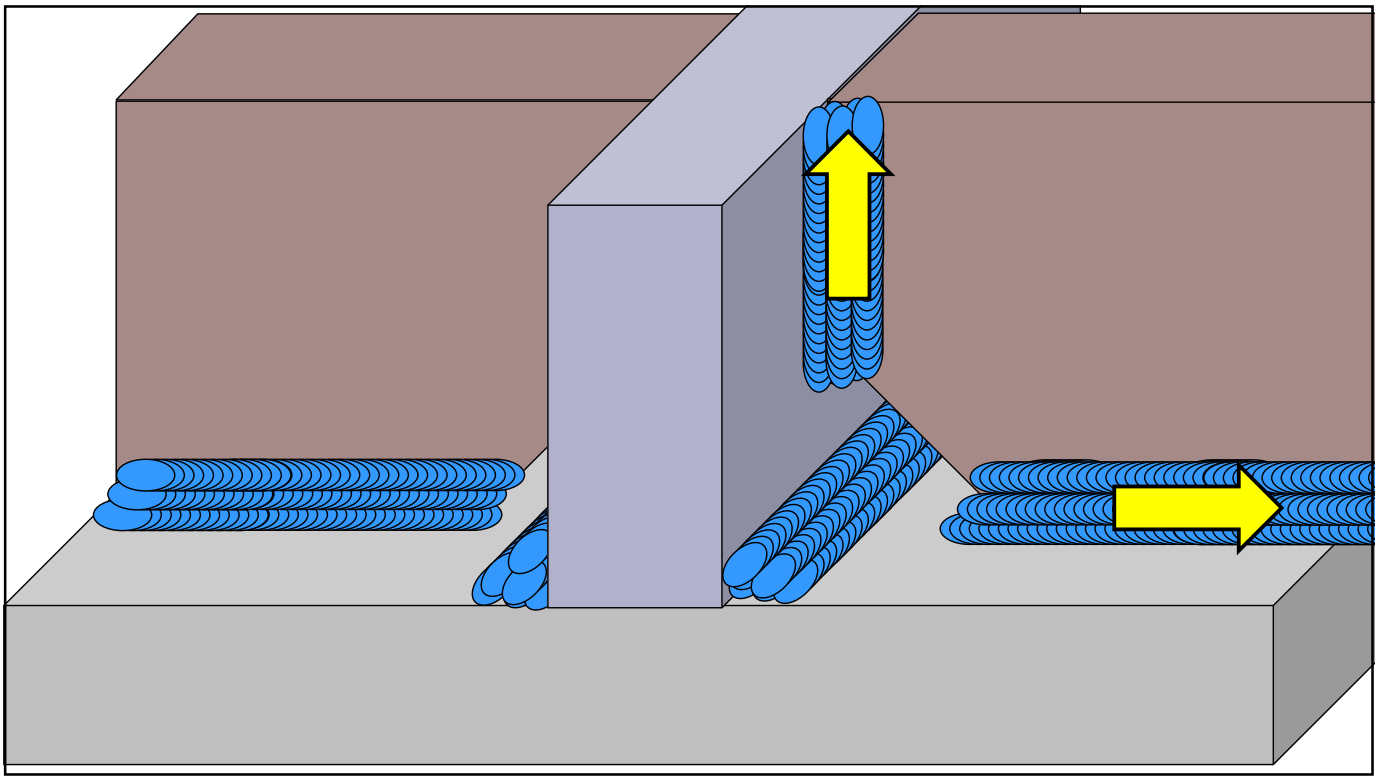

223

How to Achieve Controlled Inelastic Deformations

- Select a ductile material
- Avoid conditions that prompt brittle fracture

  (triaxial stress, constraint, notches, low temperatures, high strain rates)
- Encourage shear stresses
- Applied shear stress > critical shear strength

Demand > Resistance

224

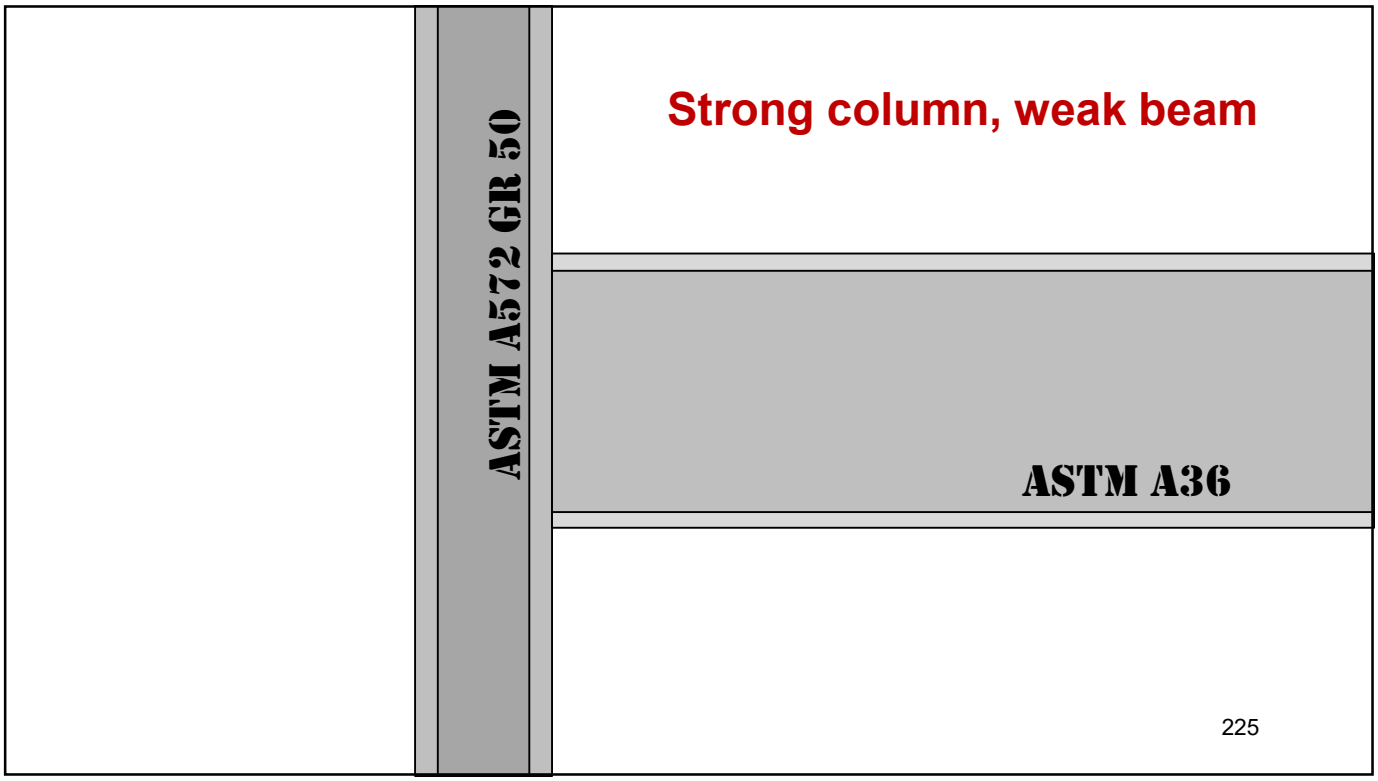
ASTM A572 GR 50
Strong column, weak beam
ASTM A36
225

225

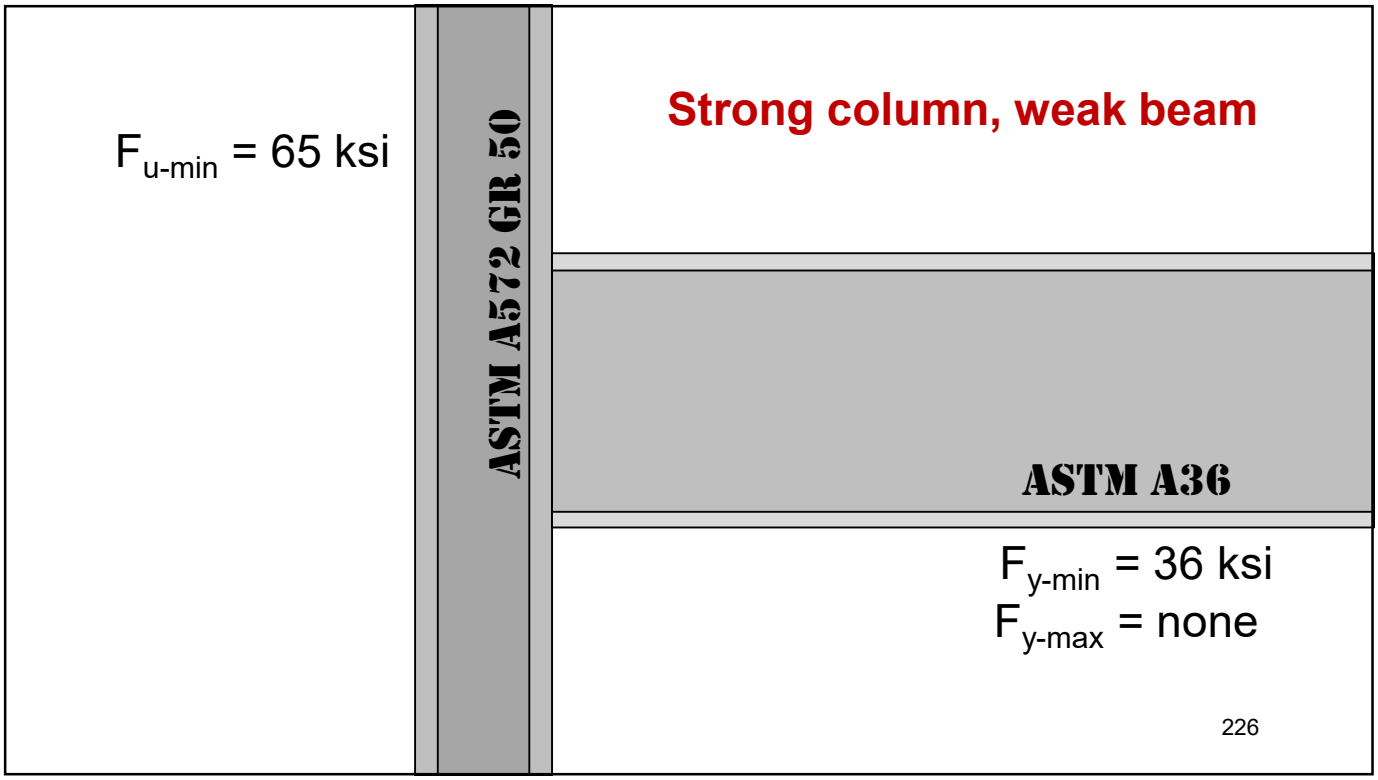
$F_{u\text{-}min}$ = 65 ksi
ASTM A572 GR 50
Strong column, weak beam
ASTM A36
$F_{y\text{-}min}$ = 36 ksi
$F_{y\text{-}max}$ = none
226

226

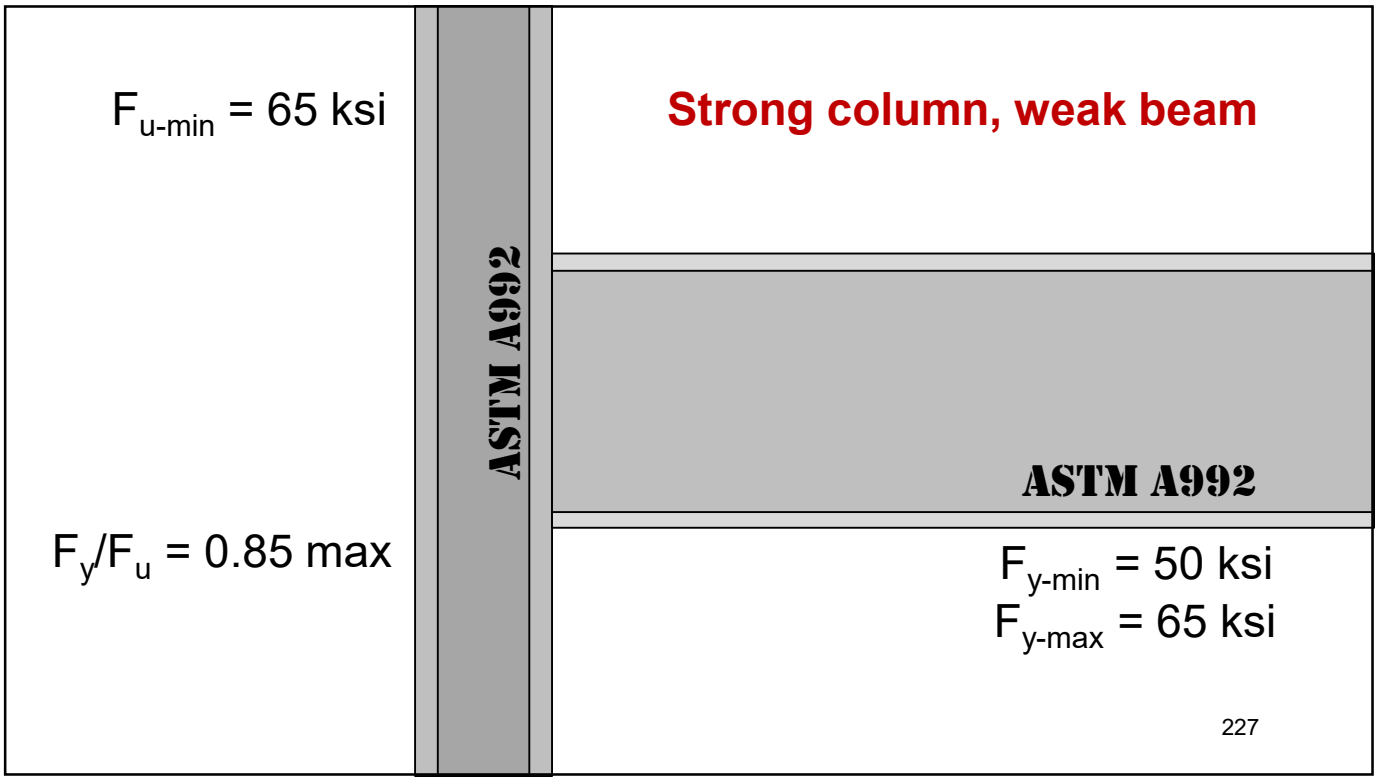

227

How to Achieve Controlled Inelastic Deformations

- Select a ductile material
- Avoid conditions that prompt brittle fracture

  (triaxial stress, constraint, notches, low temperatures, high strain rates)
- Encourage shear stresses
- Applied shear stress > critical shear strength

228

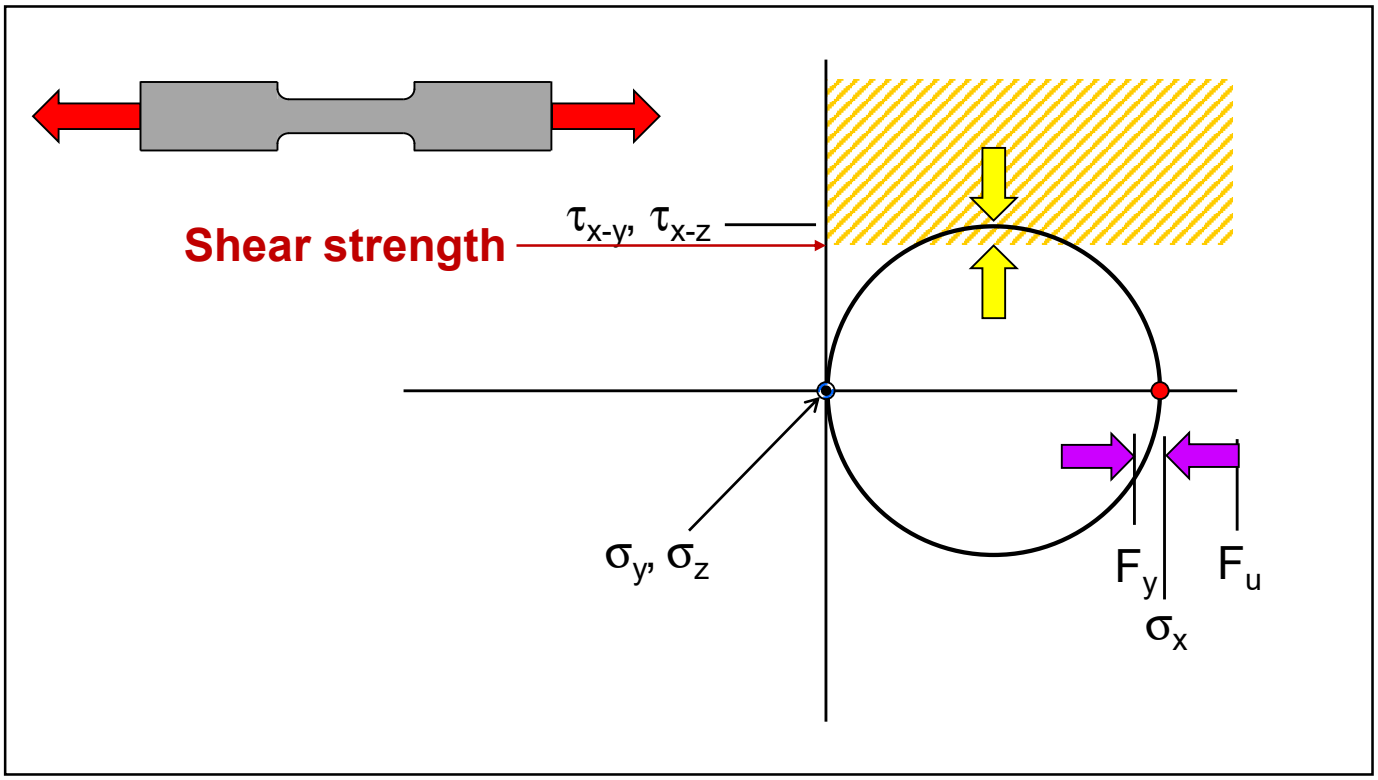

229

How to Achieve Controlled Inelastic Deformations

- Select a ductile material
- Avoid conditions that prompt brittle fracture

  (triaxial stress, constraint, notches, low temperatures, high strain rates)
- Encourage shear stresses
- Applied shear stress > critical shear strength
- Ensure enough material is present to create meaningful displacements

230

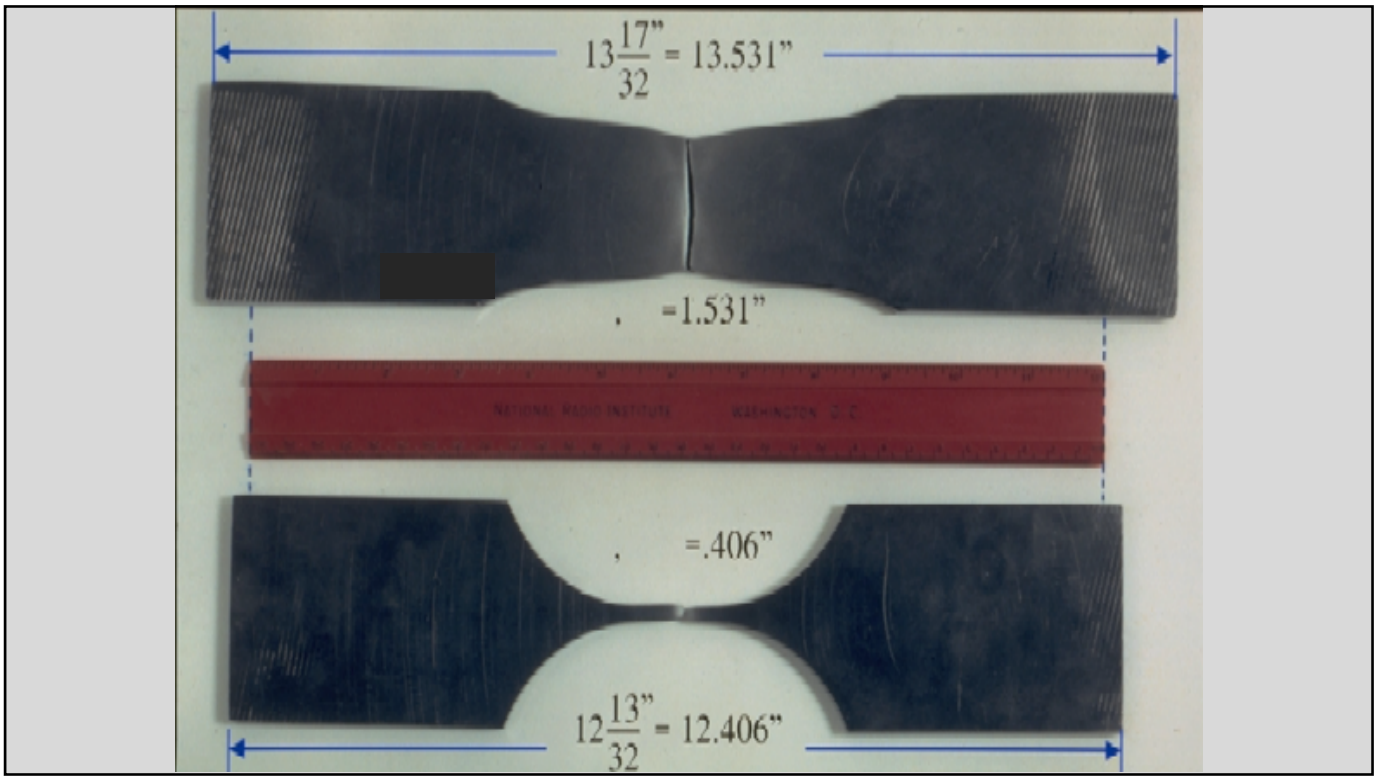
$13\frac{17}{32}$" = 13.531"
=1.531"
=.406"
$12\frac{13}{32}$" = 12.406"

231

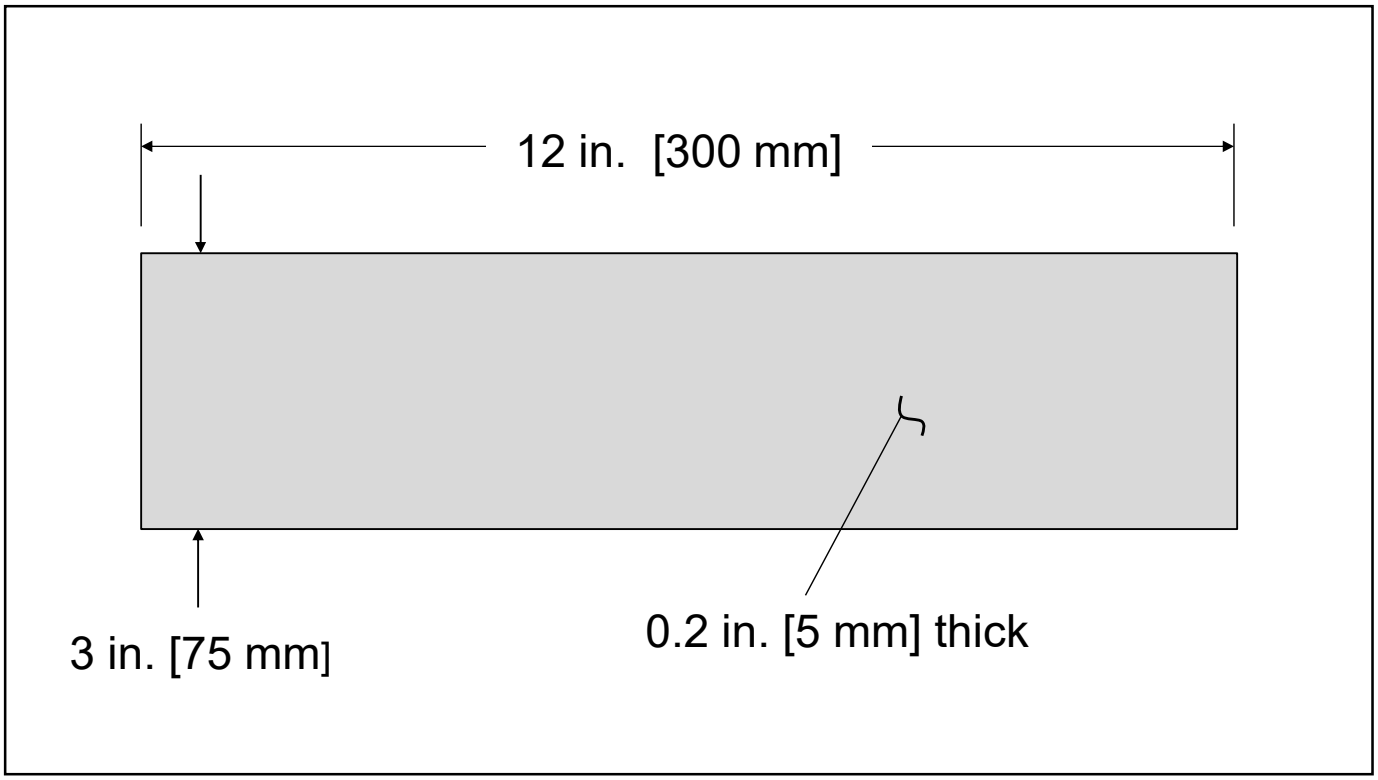
12 in. [300 mm]
3 in. [75 mm]
0.2 in. [5 mm] thick

232

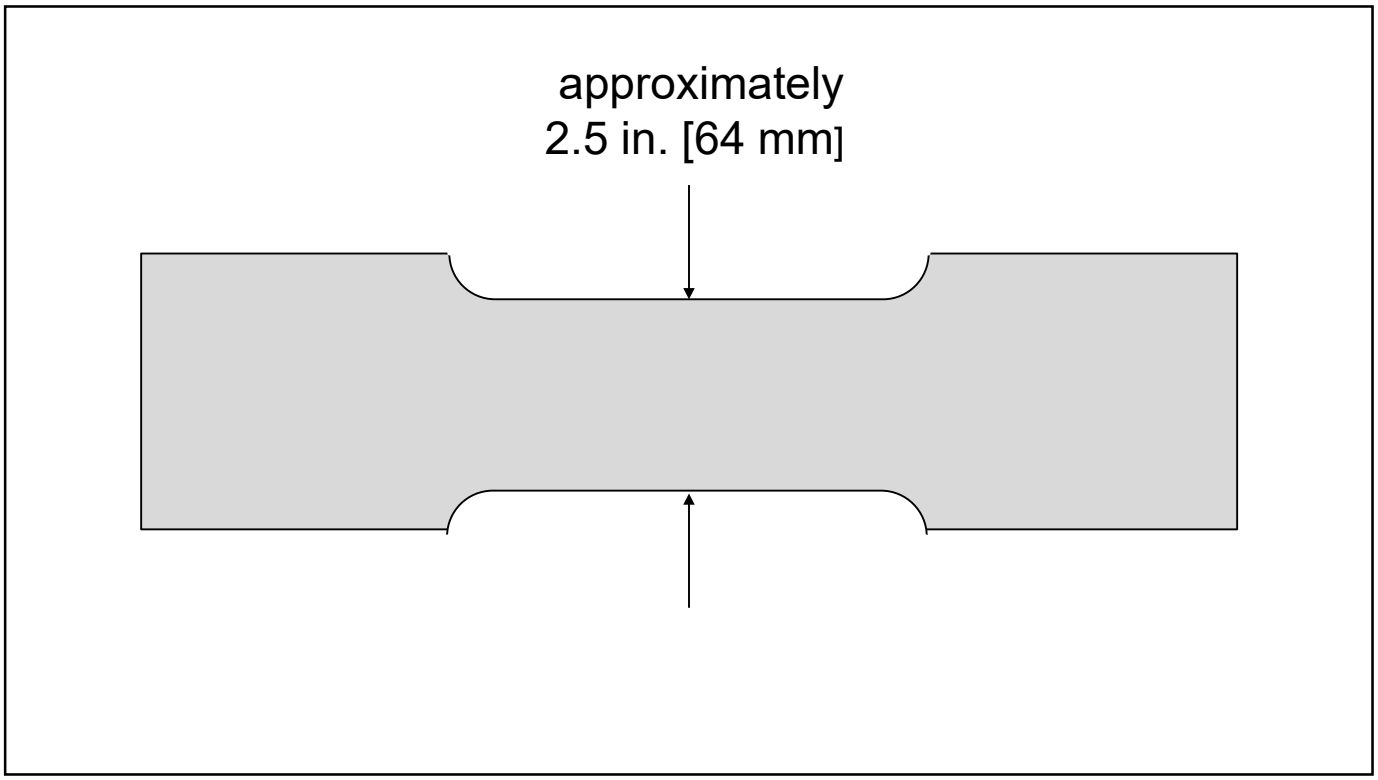

233

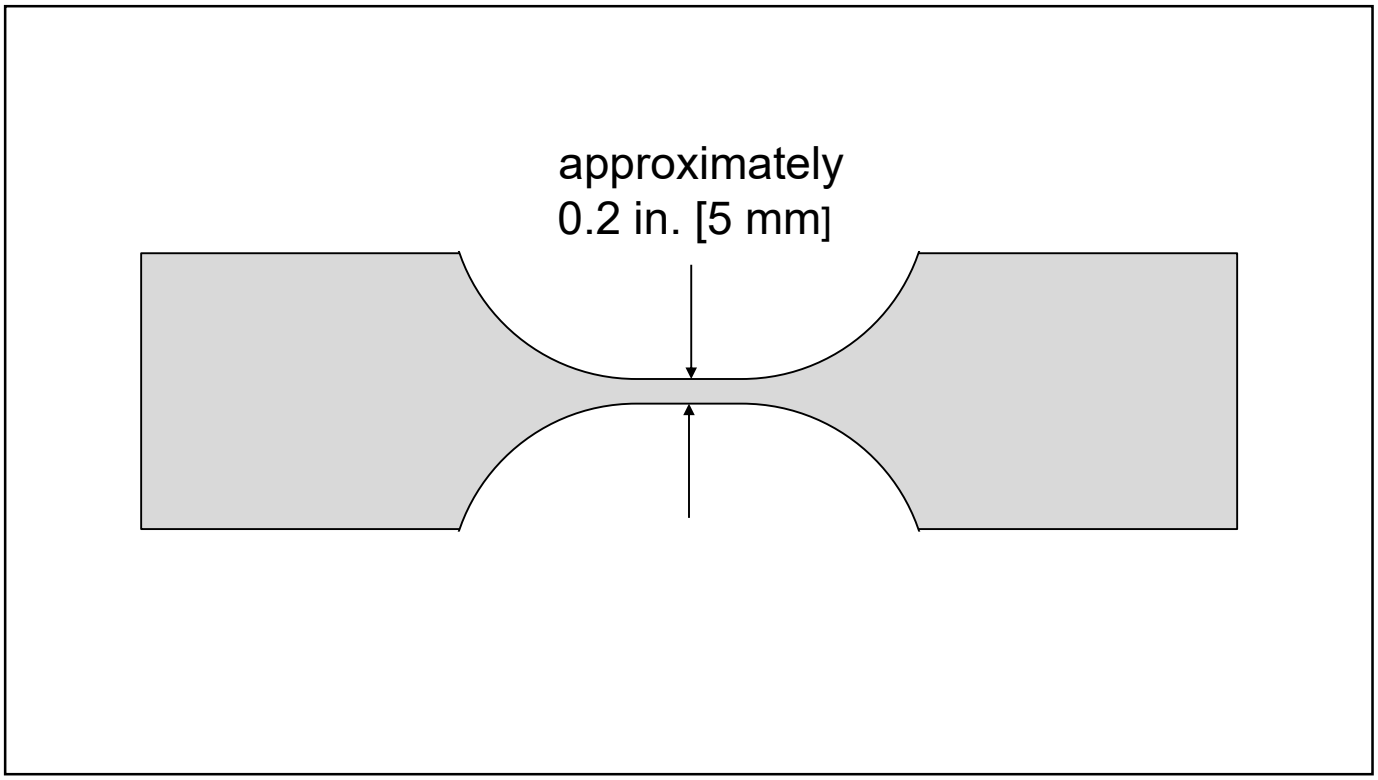

234

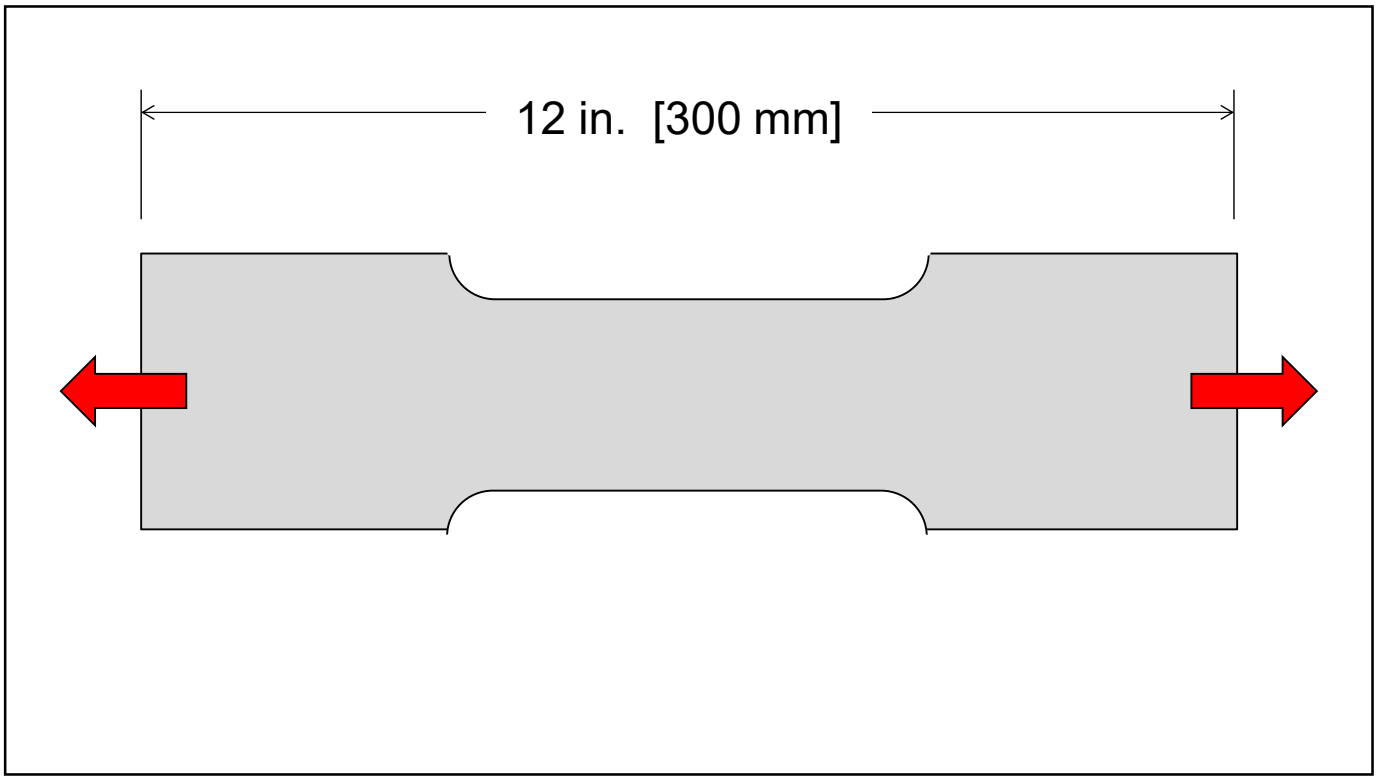

235

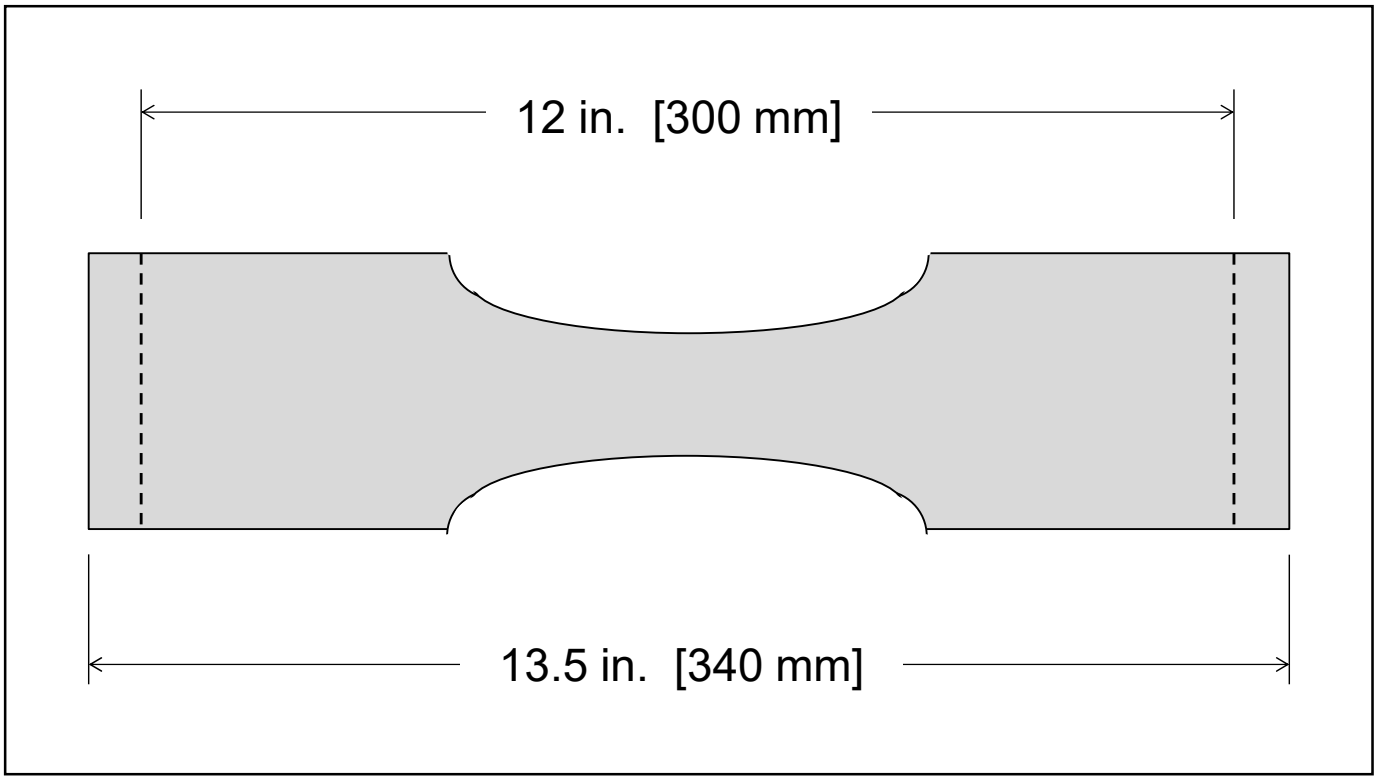

236

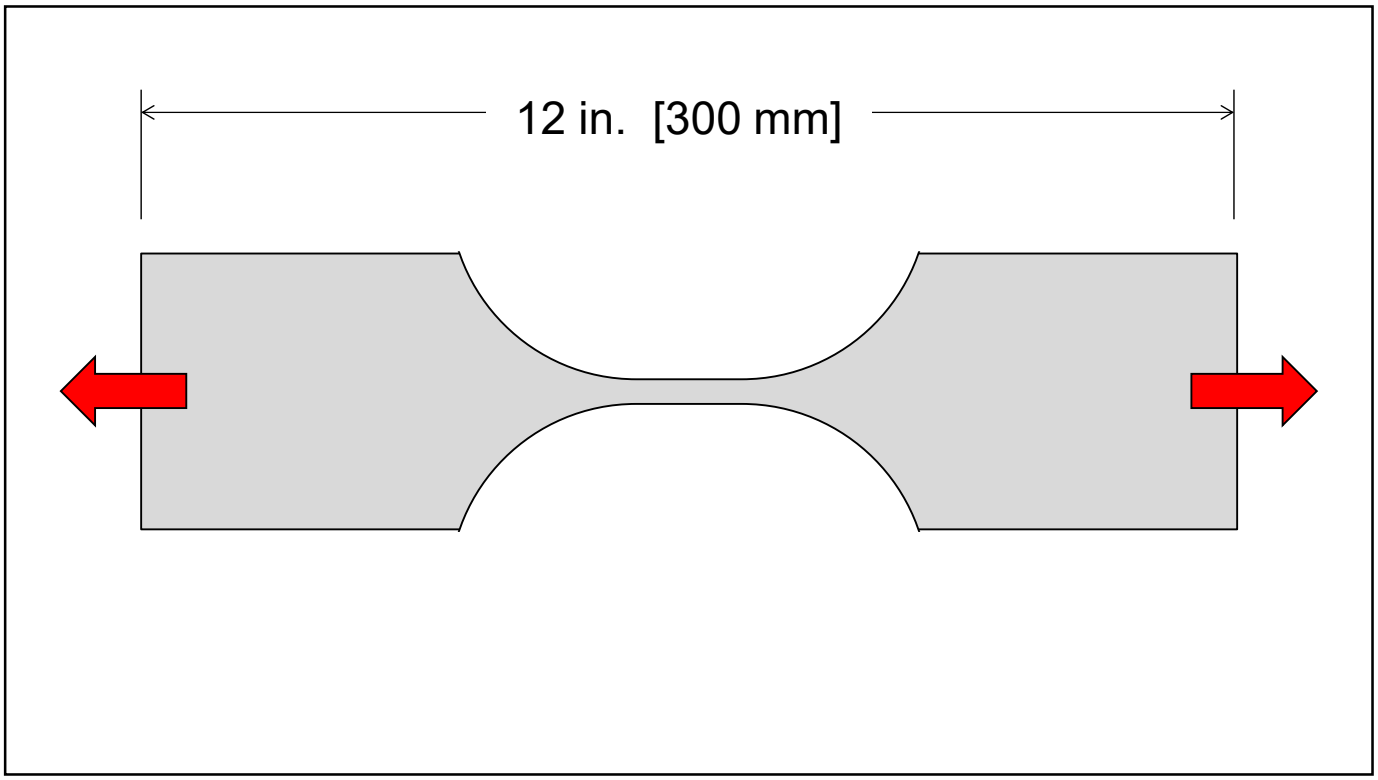

237

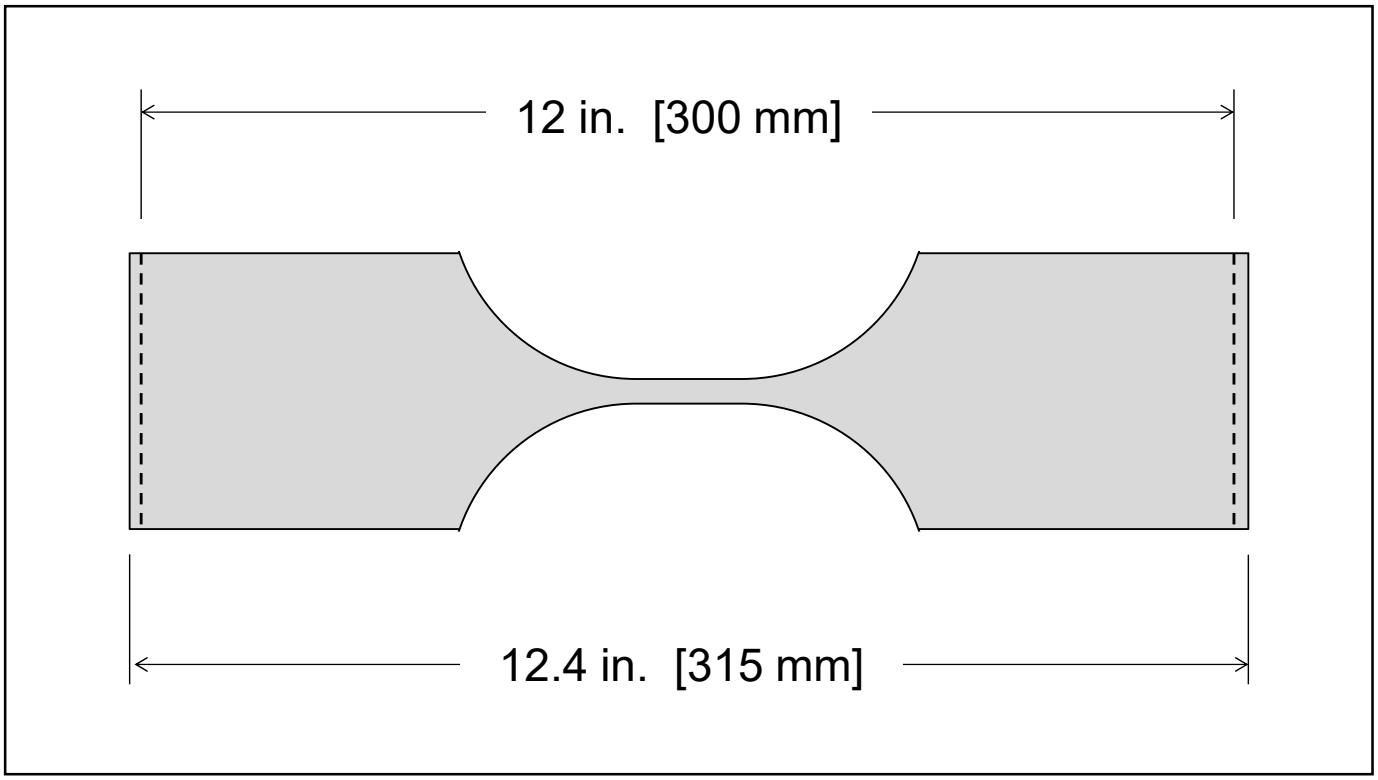

238

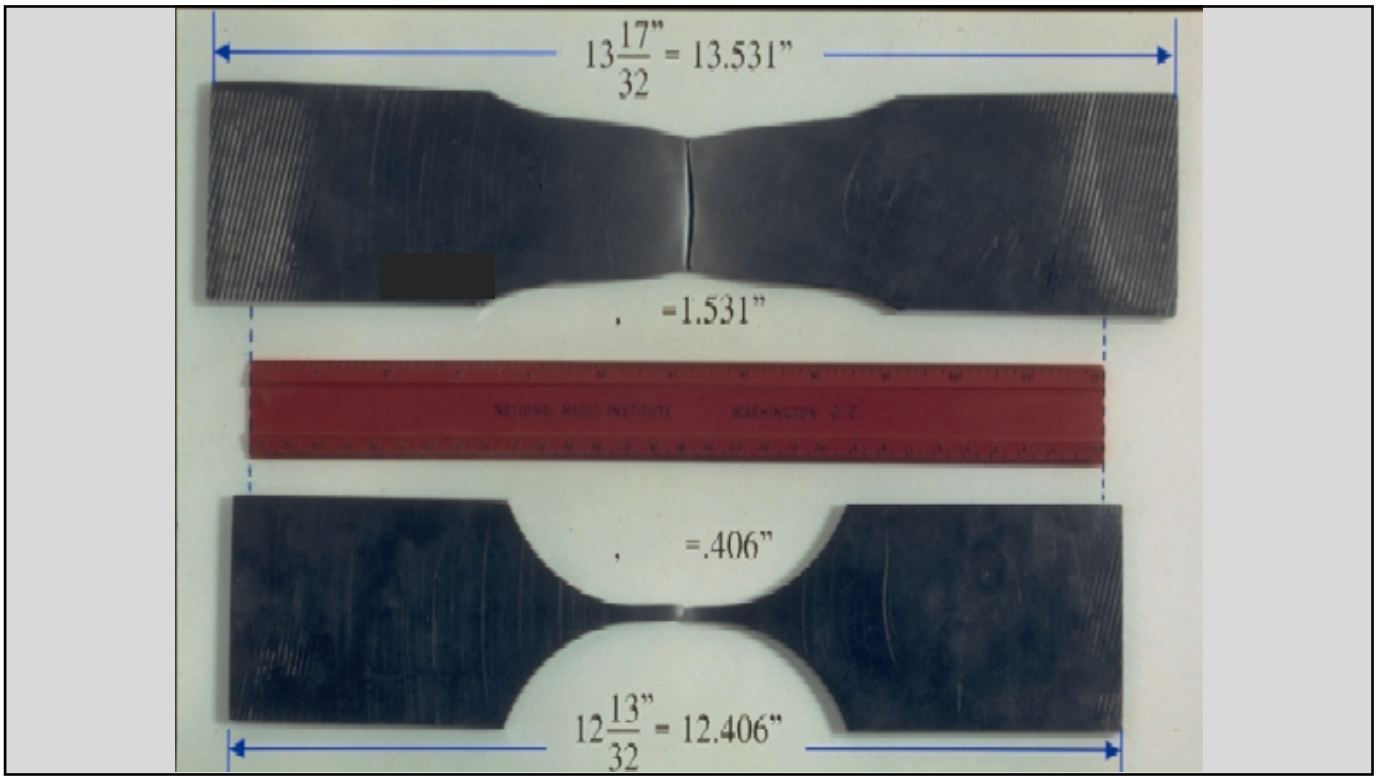
$13\frac{17}{32}$" = 13.531"
=1.531"
=.406"
$12\frac{13}{32}$" = 12.406"

239

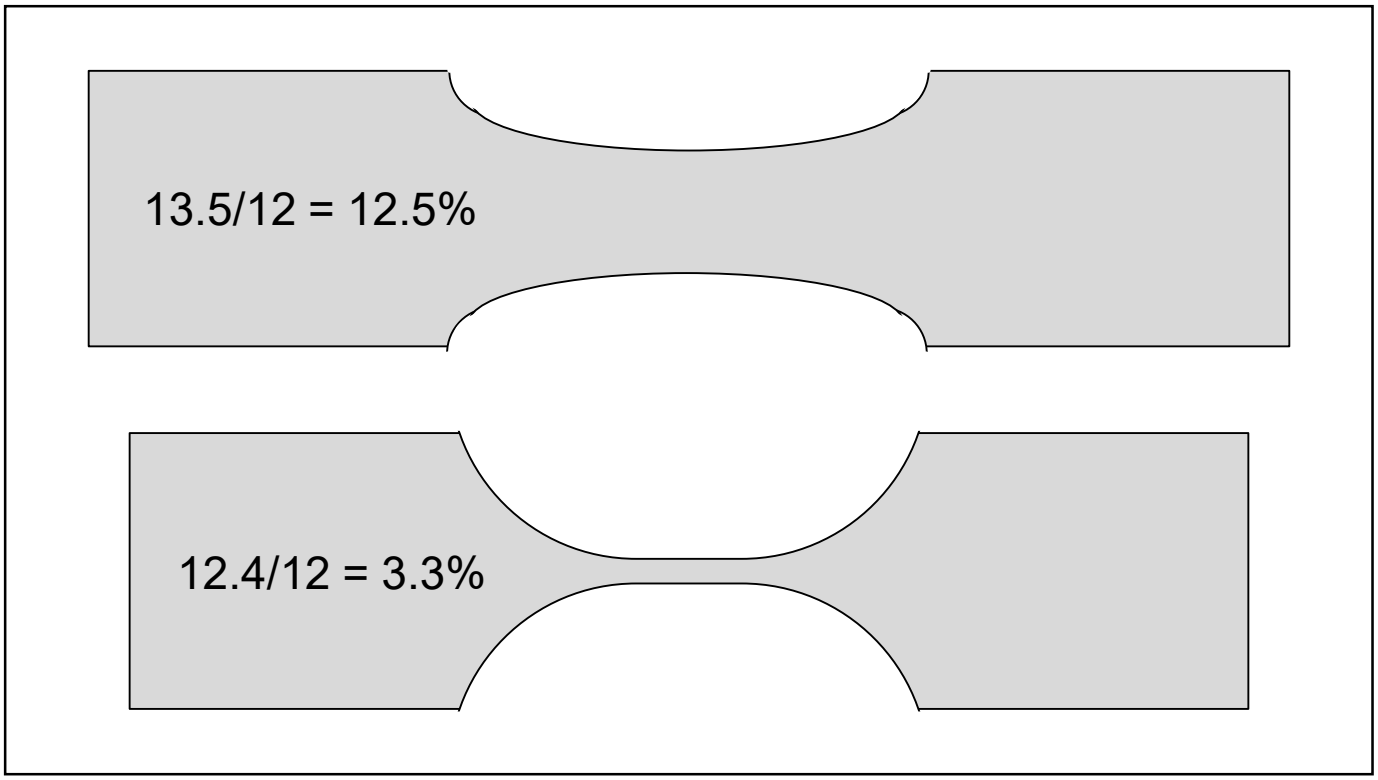
13.5/12 = 12.5%
12.4/12 = 3.3%

240

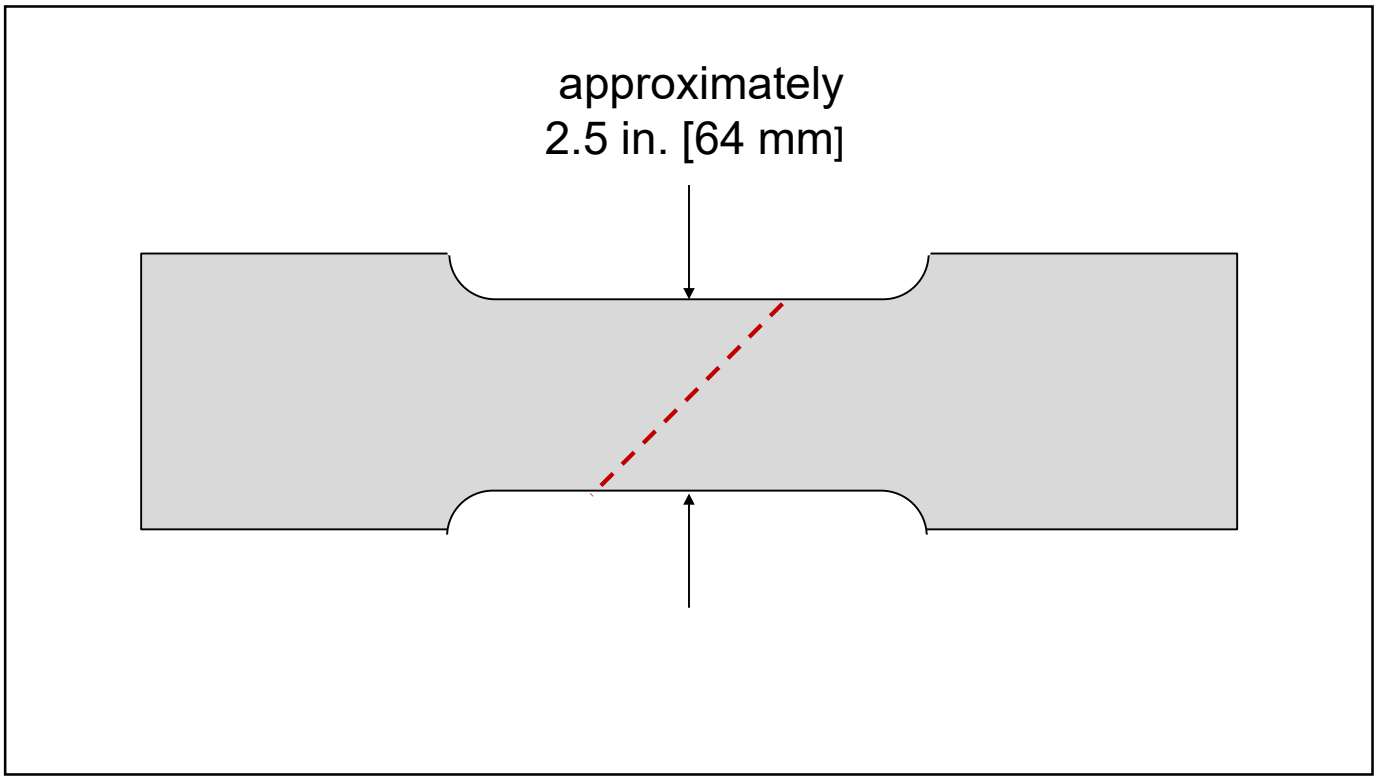

241

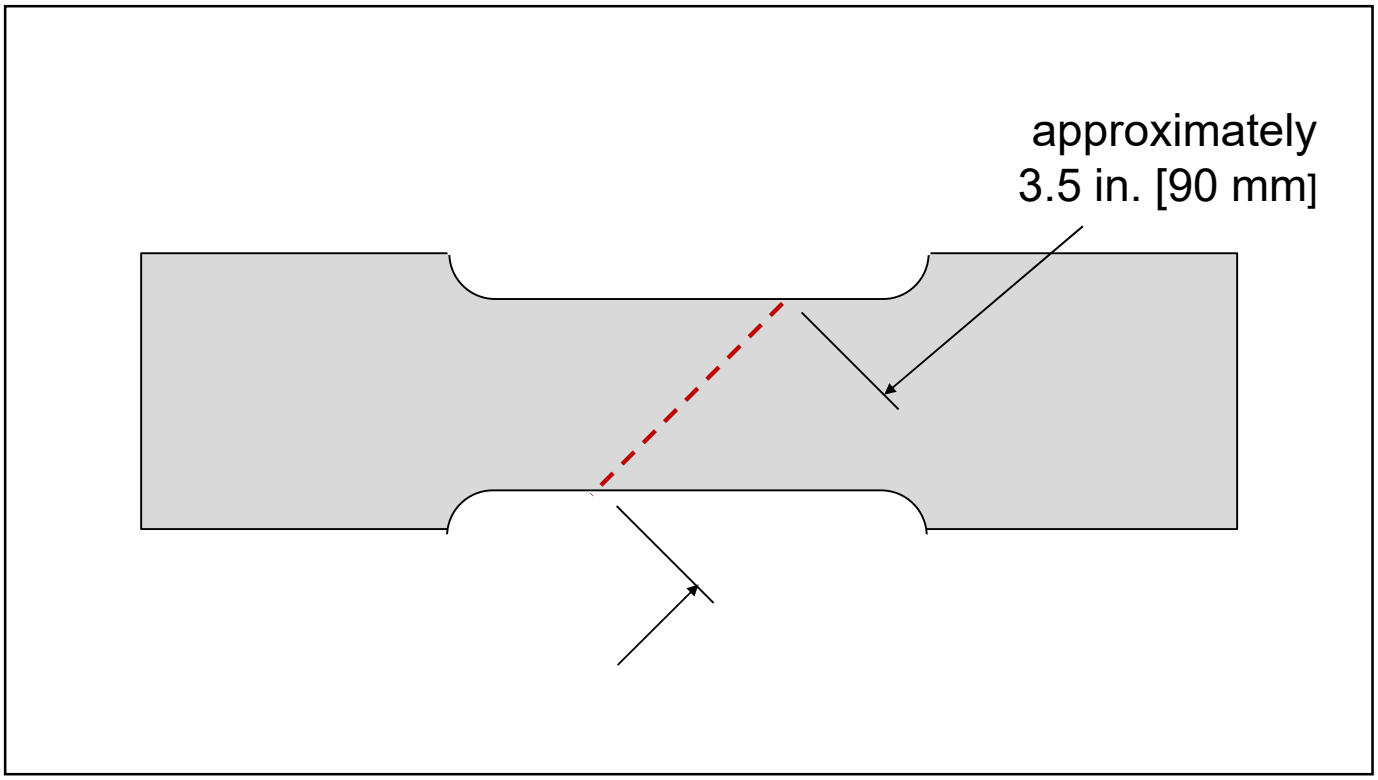

242

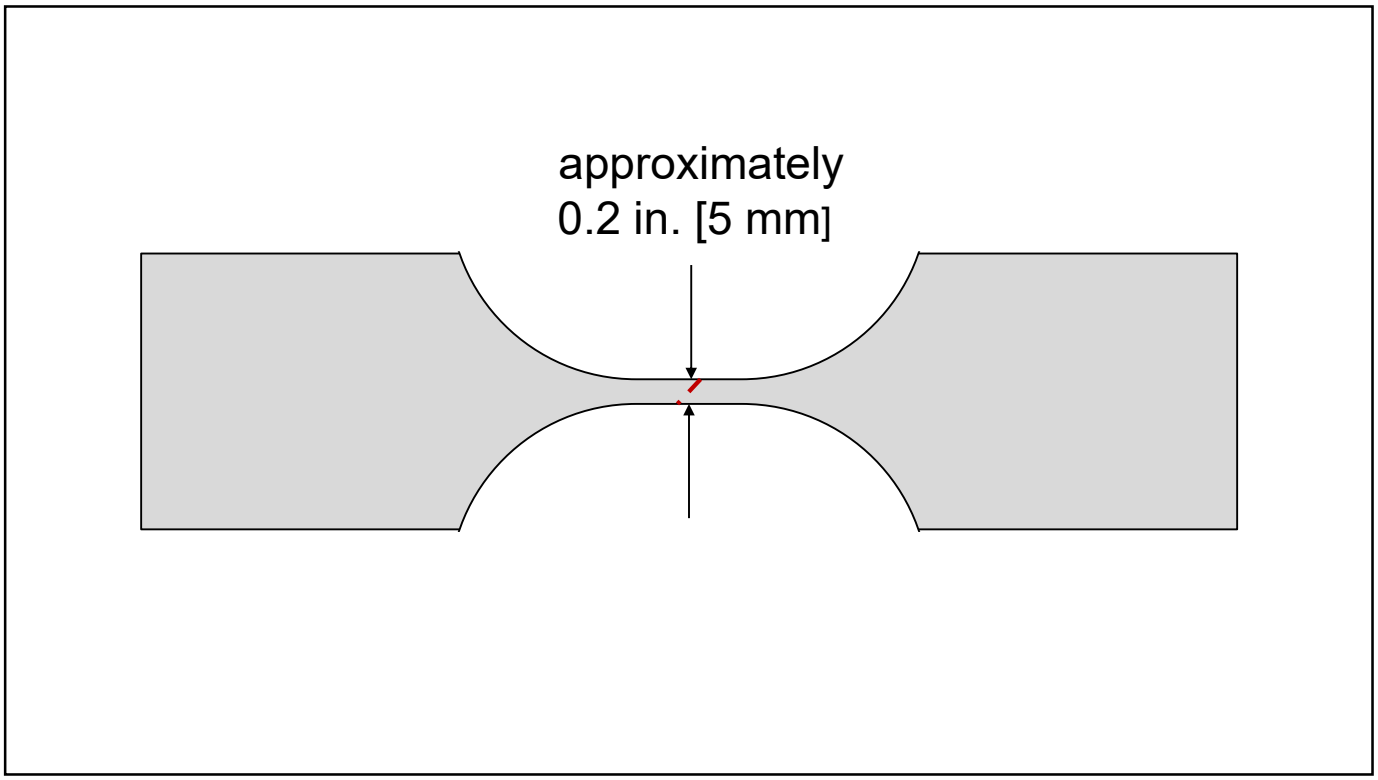

243

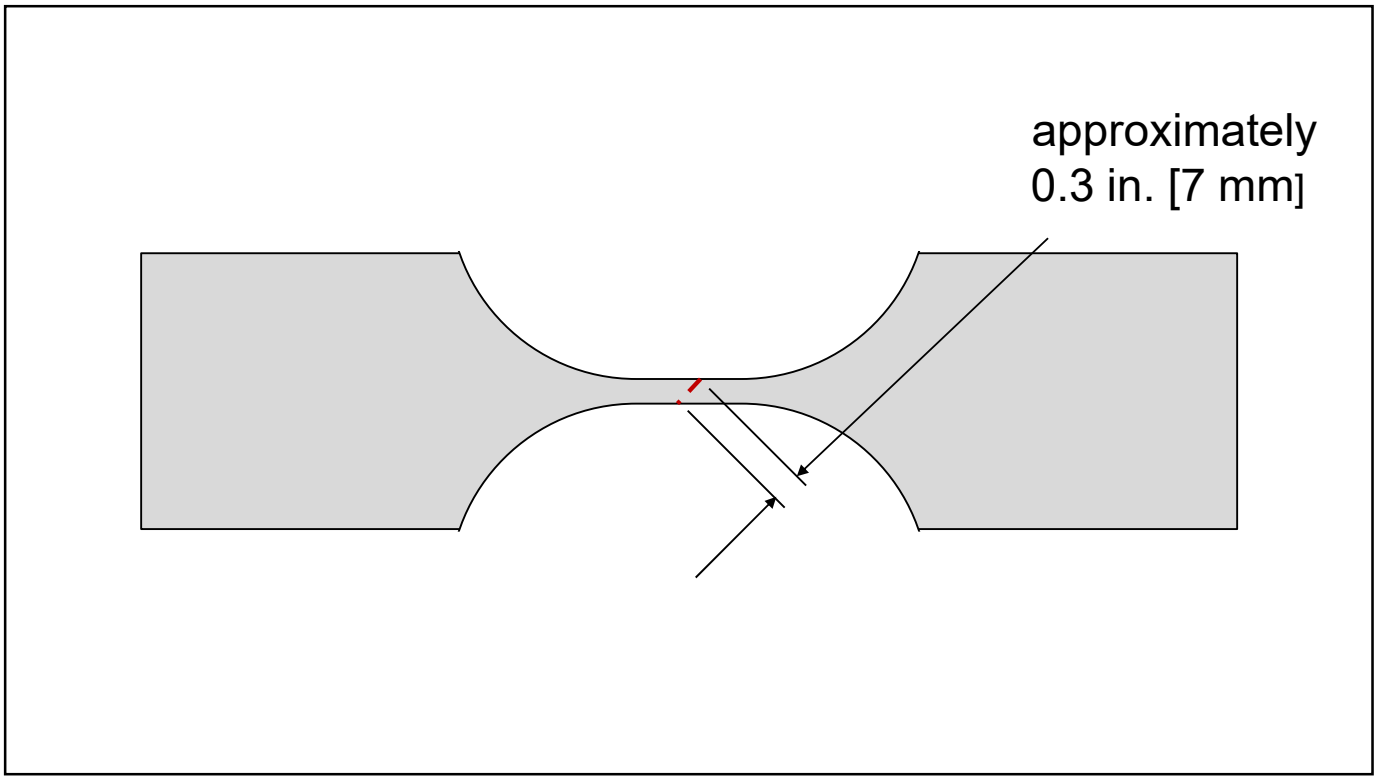

244

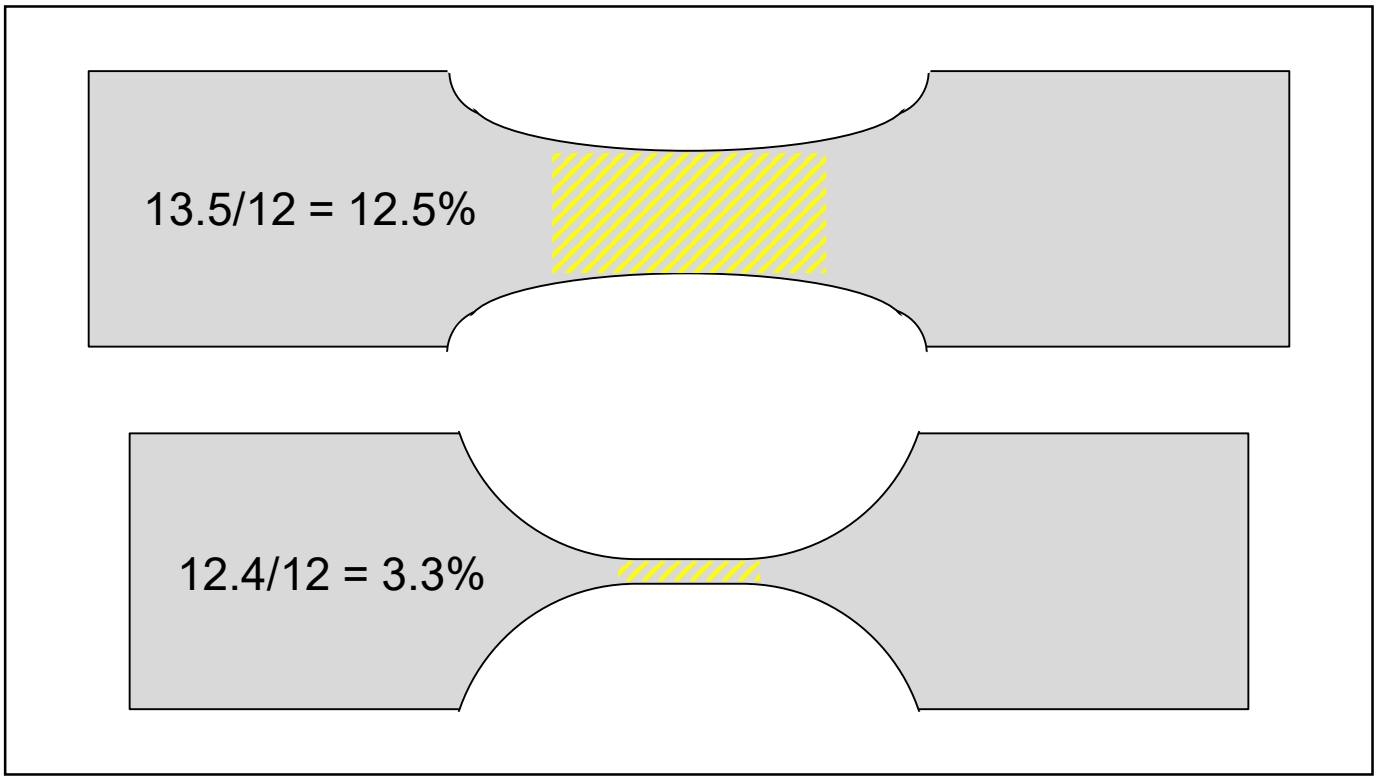

245

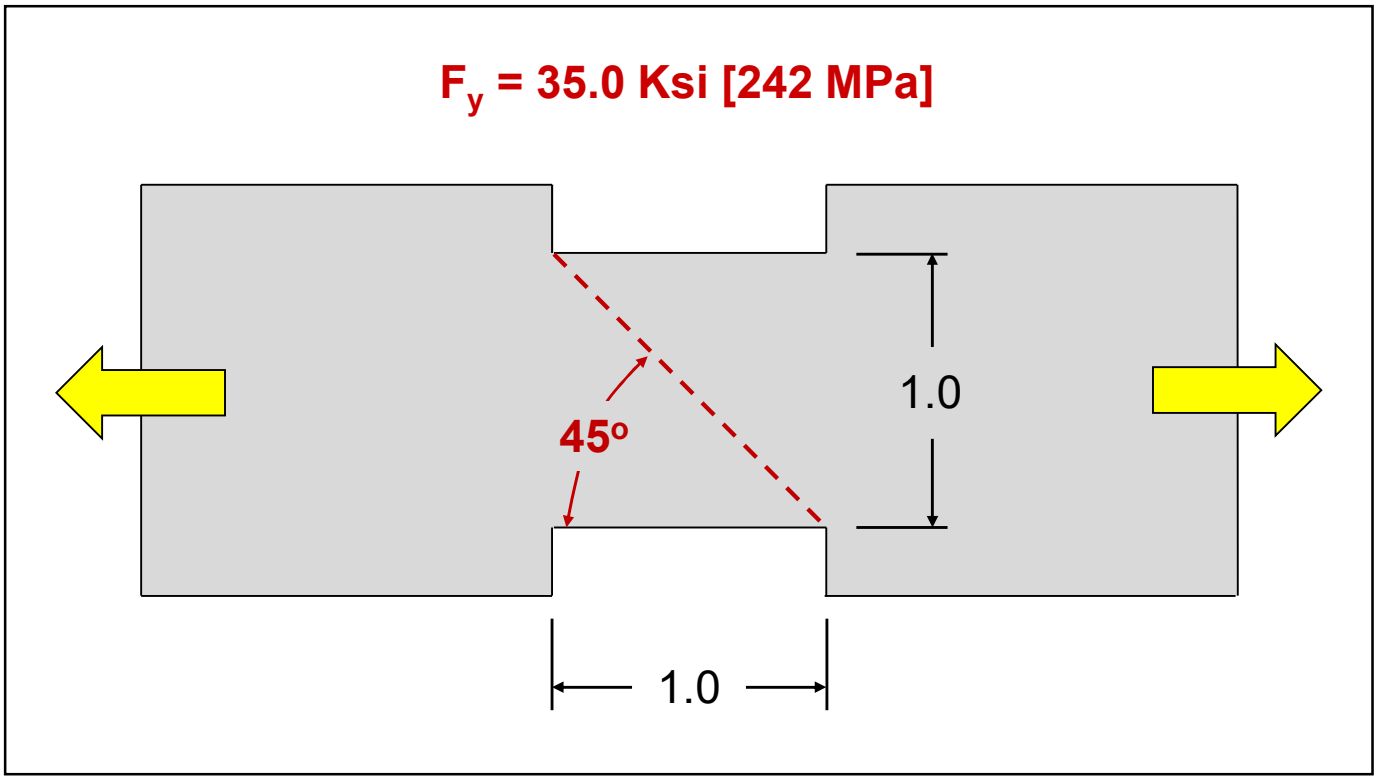

246

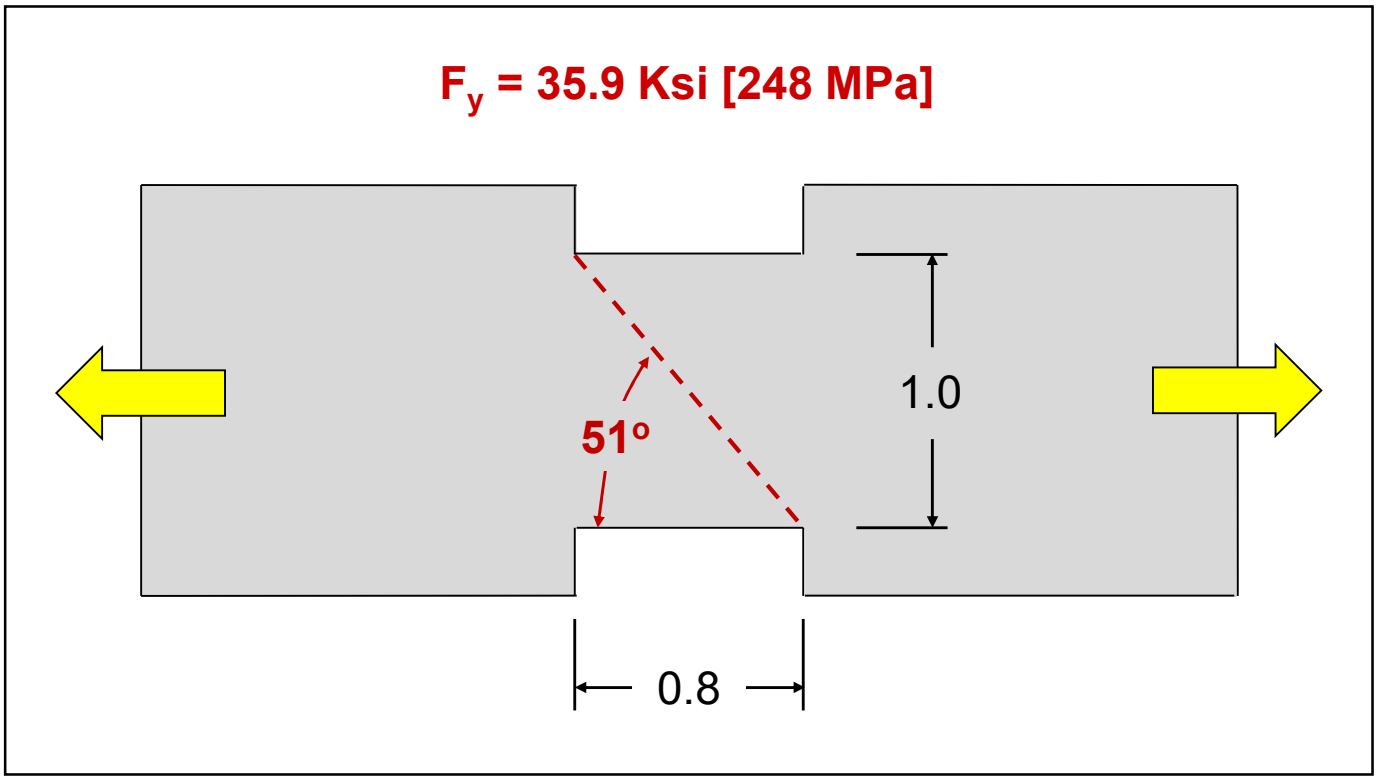

247

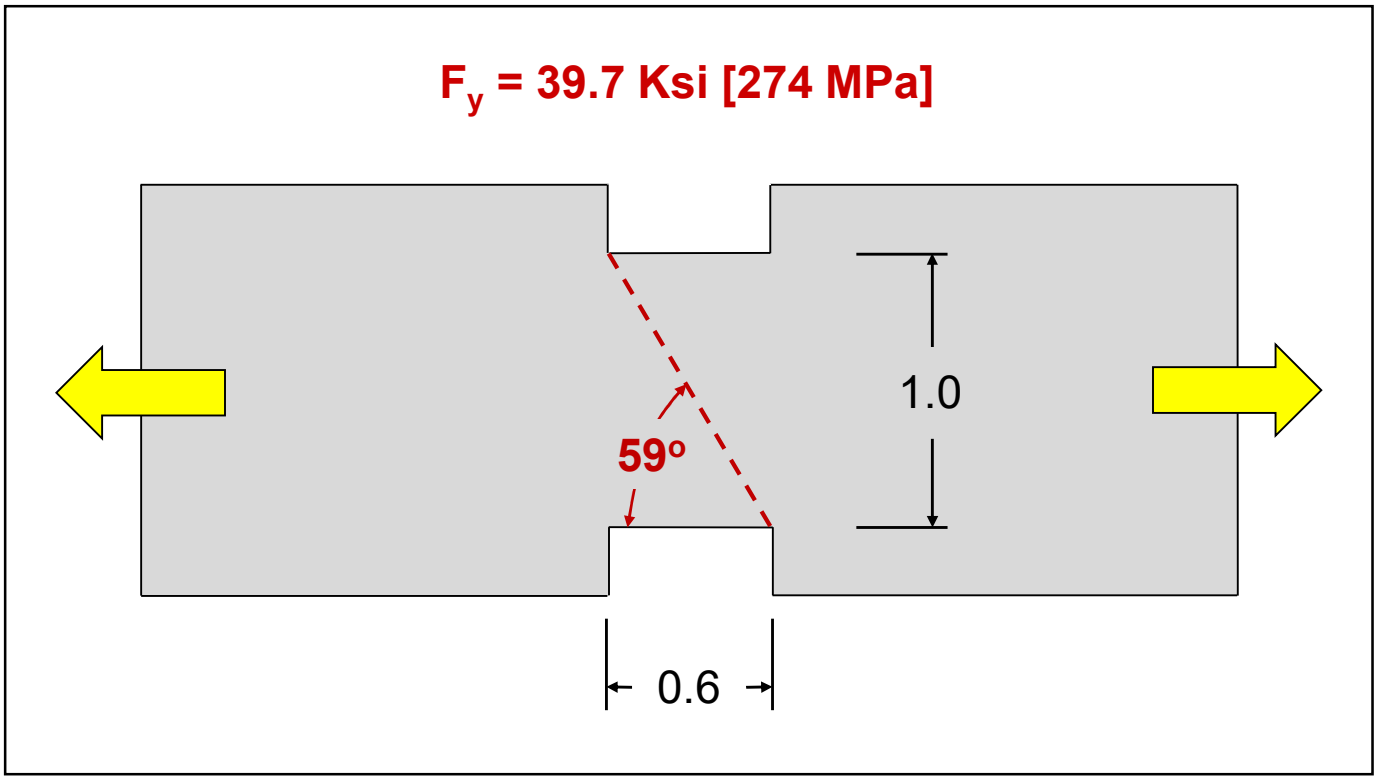

248

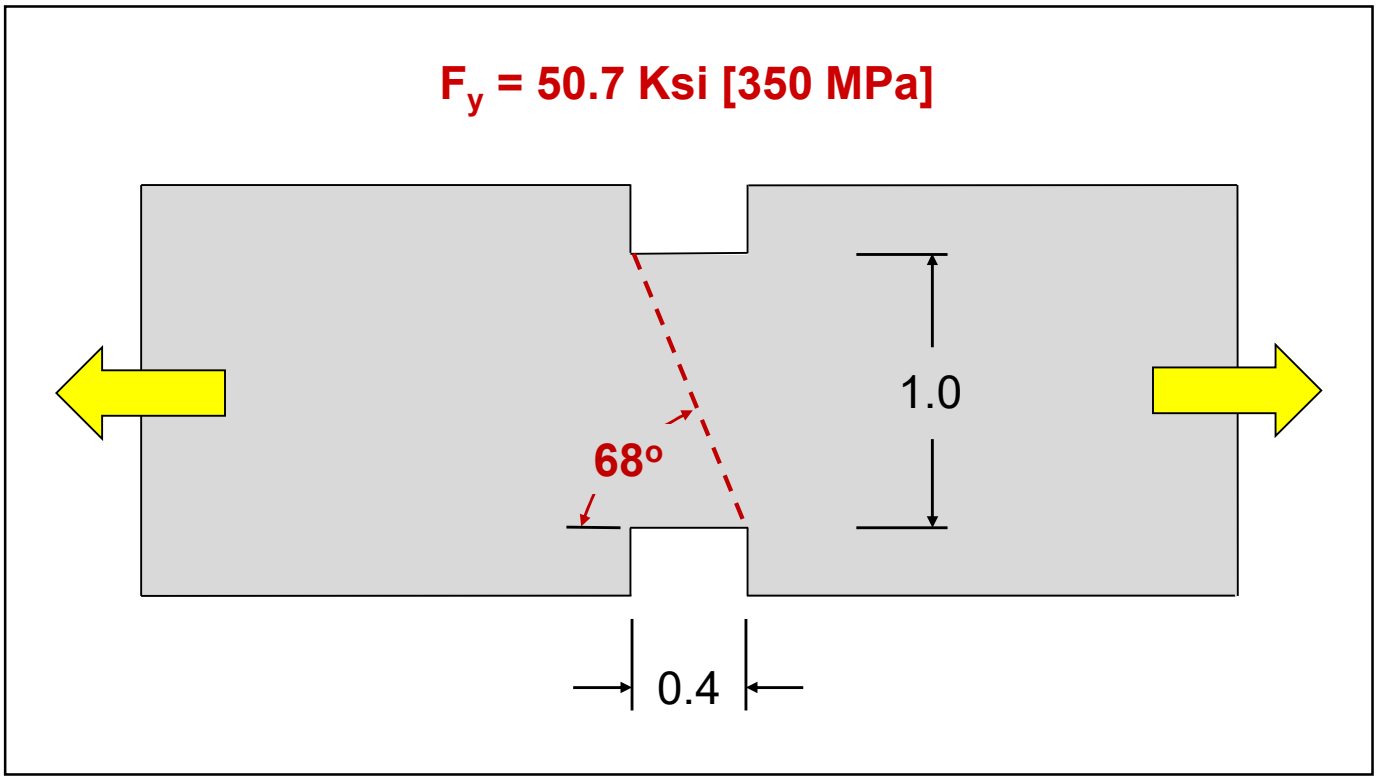

249

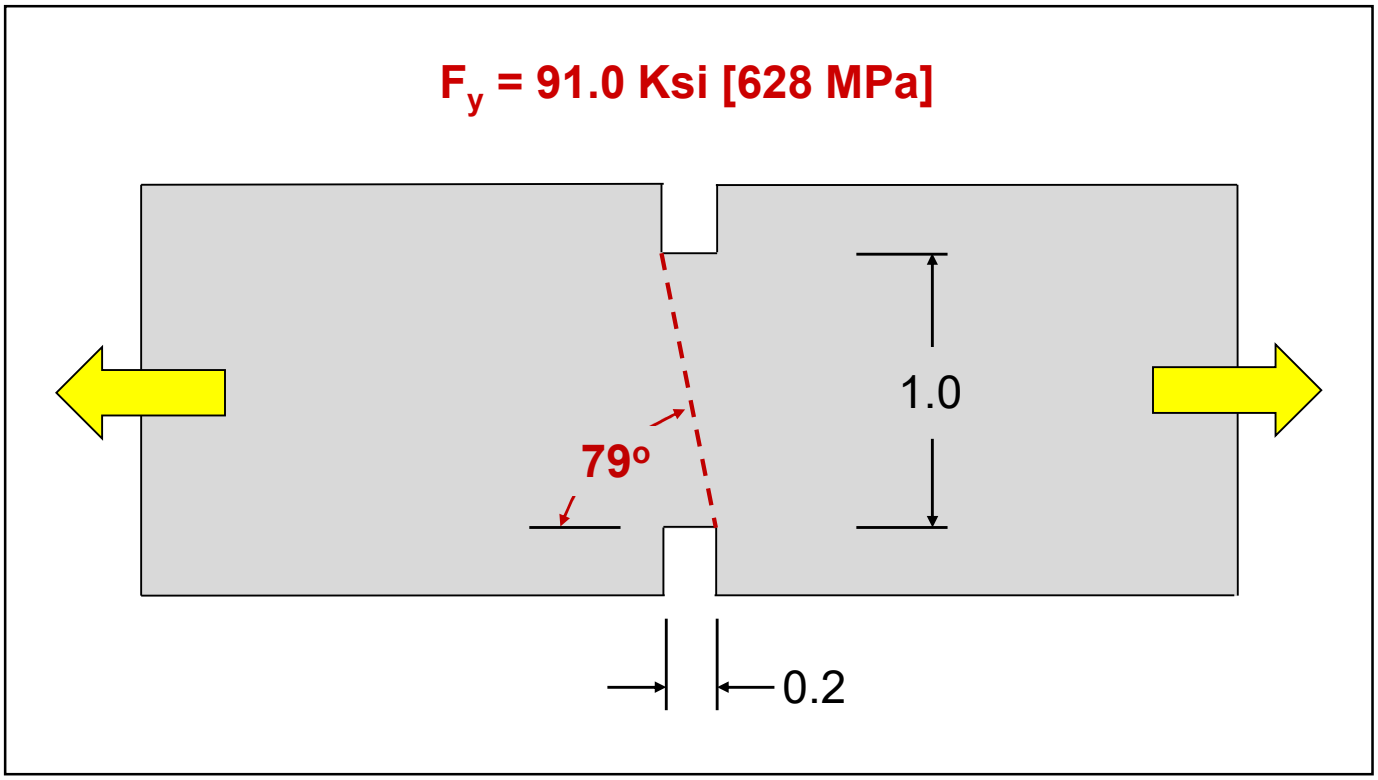

250

Width	Length	Angle	Yield Stress (ksi)	Yield Stress (MPa)
1.0	1.0	45°	35.0	242
	0.8	51°	35.9	248
	0.6	59°	39.7	274
	0.4	68°	50.7	350
	0.2	79°	91.0	628

251

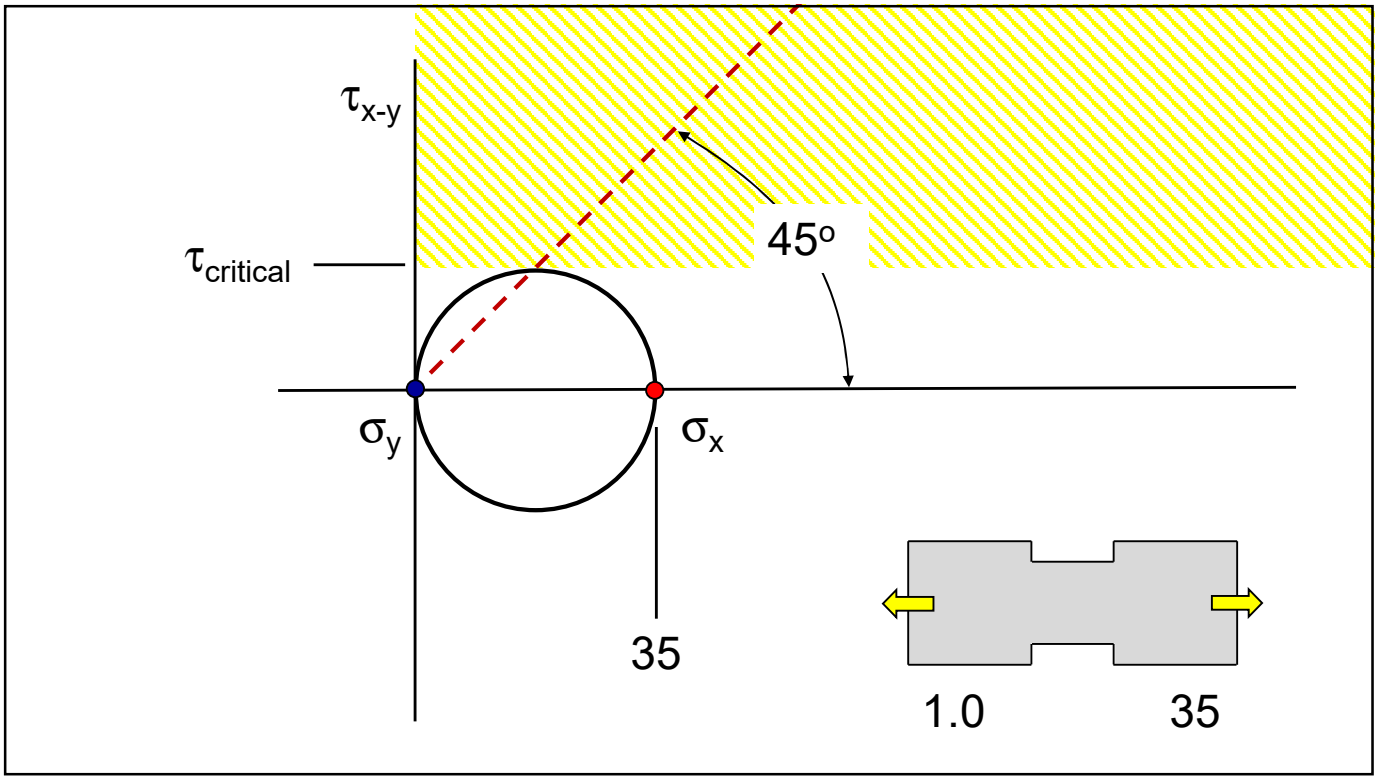

252

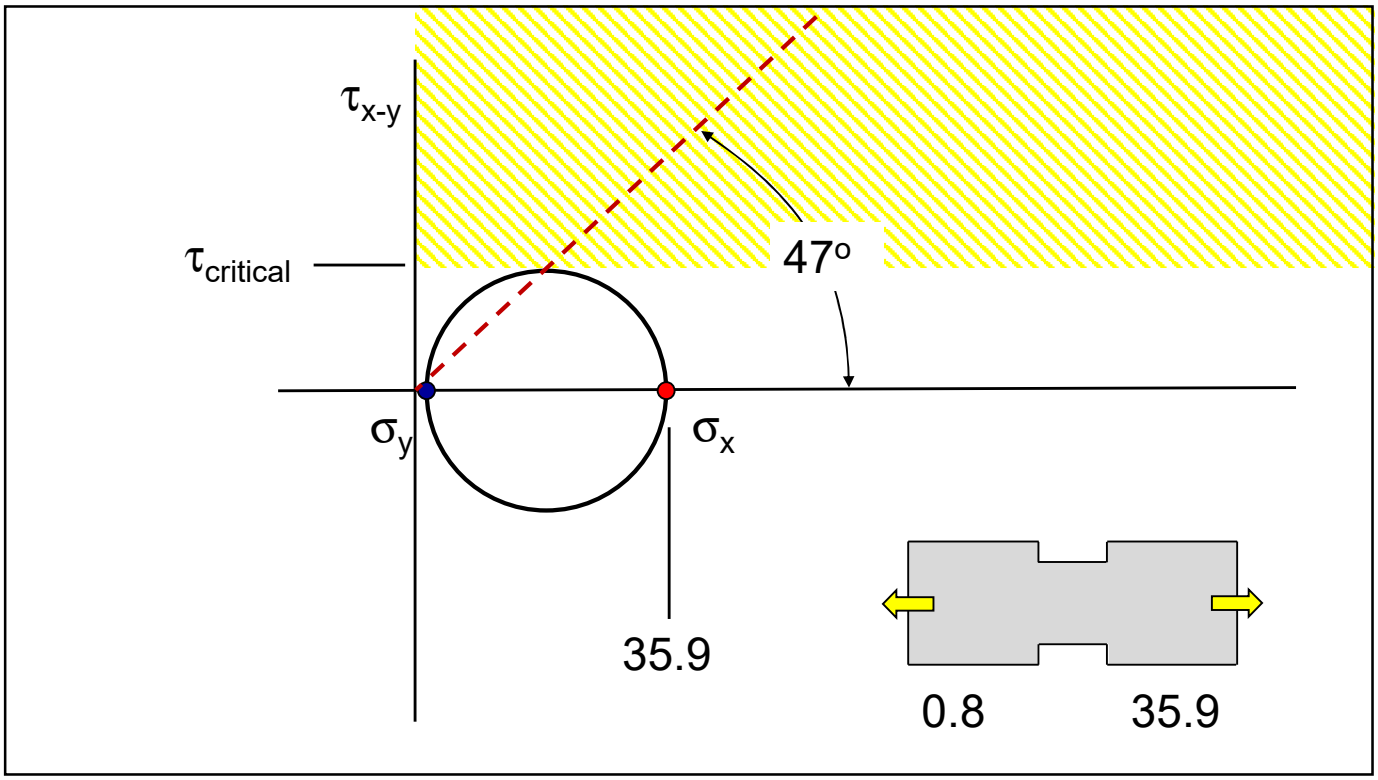
τx-y
τcritical
47°
σy
σx
35.9
0.8
35.9

253

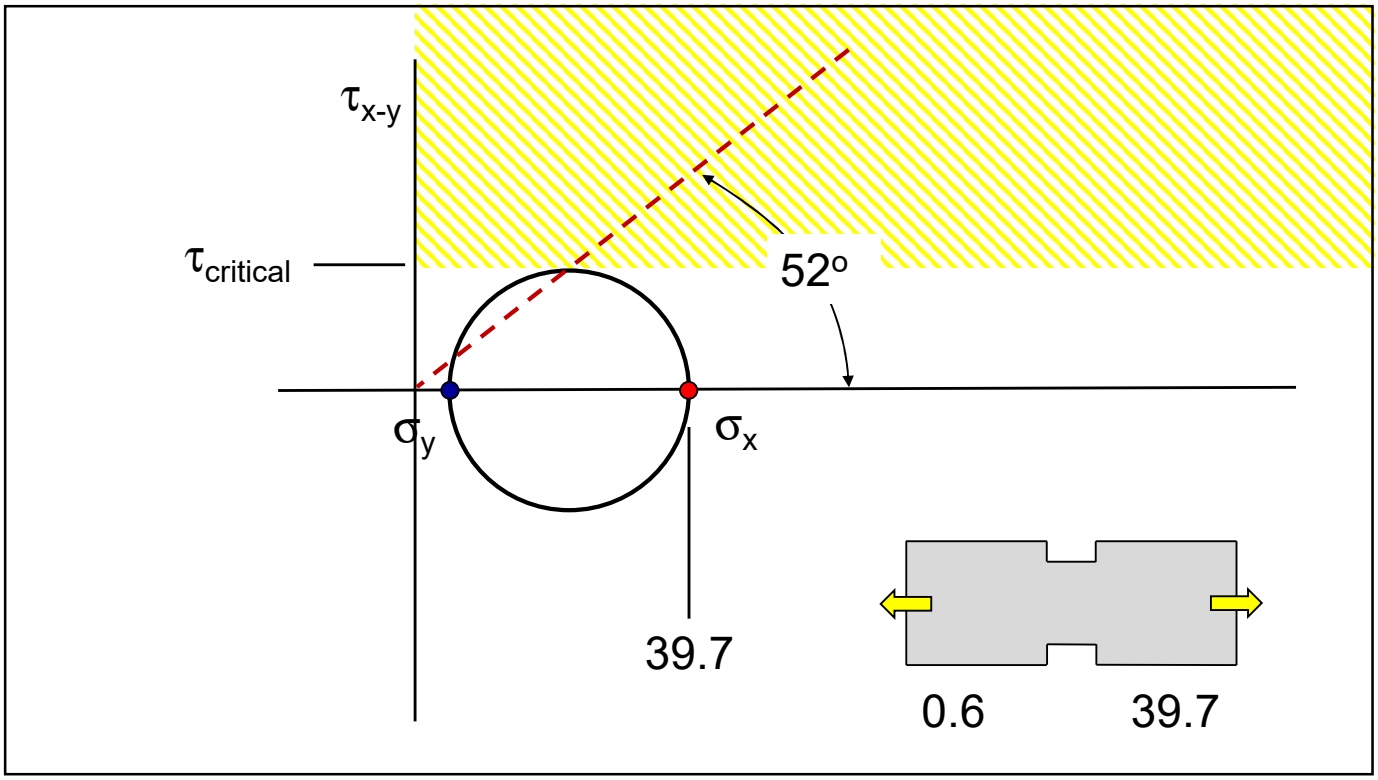
τx-y
τcritical
52°
σy
σx
39.7
0.6
39.7

254

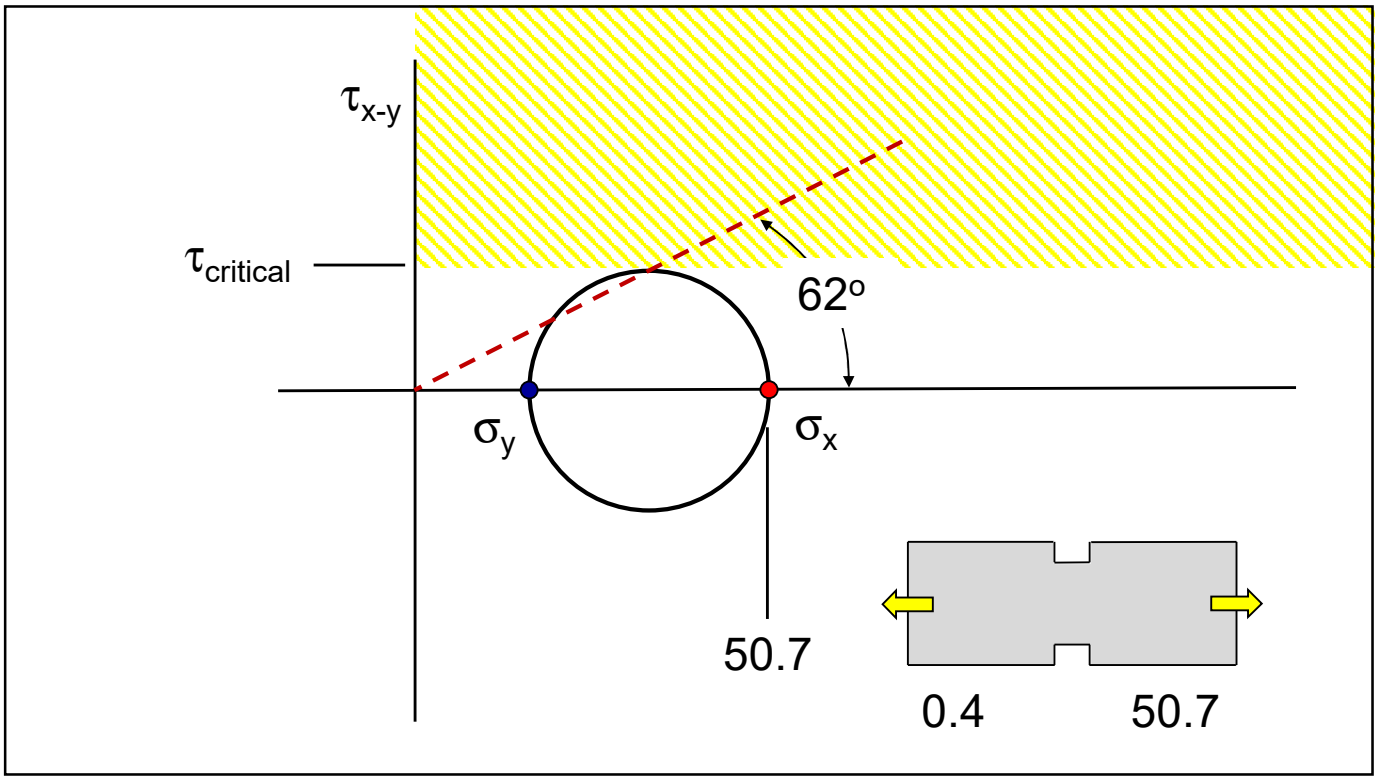
τ_{x-y}
$\tau_{critical}$
62°
σ_y
σ_x
50.7
0.4
50.7

255

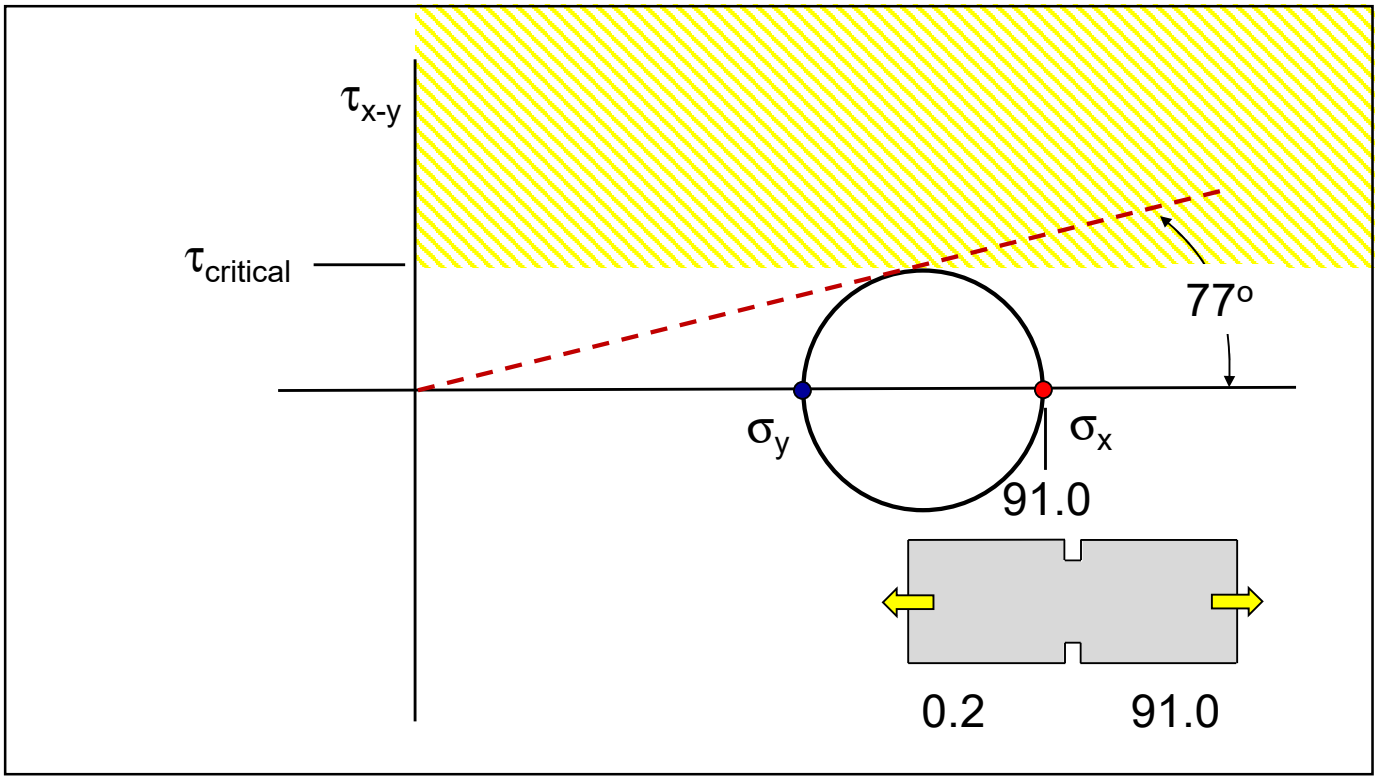
τ_{x-y}
$\tau_{critical}$
77°
σ_y
σ_x
91.0
0.2
91.0

256

Width	Length	Angle	Yield Stress (ksi)	Yield Stress (MPa)	Angle-graphical	%
1.0	1.0	45°	35.0	242	45°	0
	0.8	51°	35.9	248	47°	8
	0.6	59°	39.7	274	52°	13
	0.4	68°	50.7	350	62°	10
	0.2	79°	91.0	628	77°	2

257

AISC Design Guide 21, 2nd Edition

Welded Connections–

A Primer for Engineers

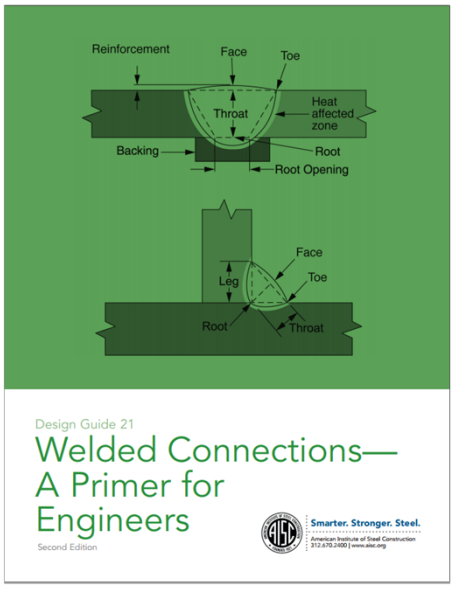

258

Chapter 15: Problems and Fixes

15.5 Fixing Members That Are Cut Short

259

Chapter 15: Problems and Fixes

15.5 Fixing Members That Are Cut Short

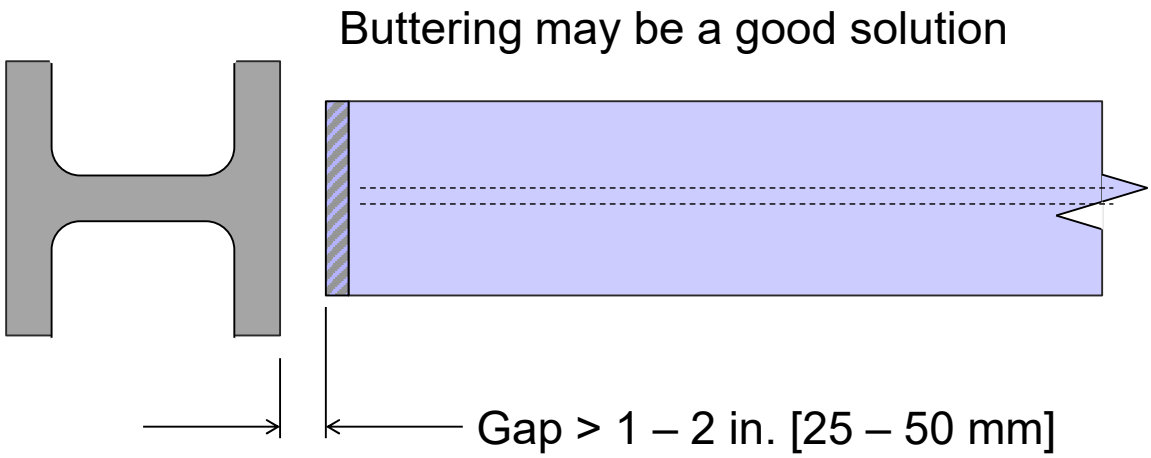

260

Chapter 15: Problems and Fixes

15.5 Fixing Members That Are Cut Short

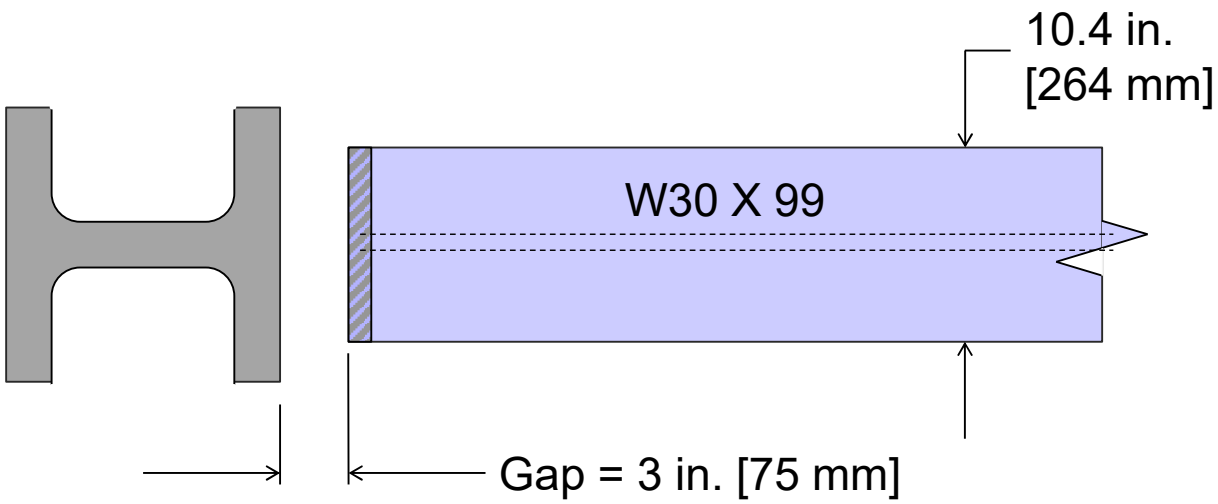

261

Chapter 15: Problems and Fixes

15.5 Fixing Members That Are Cut Short

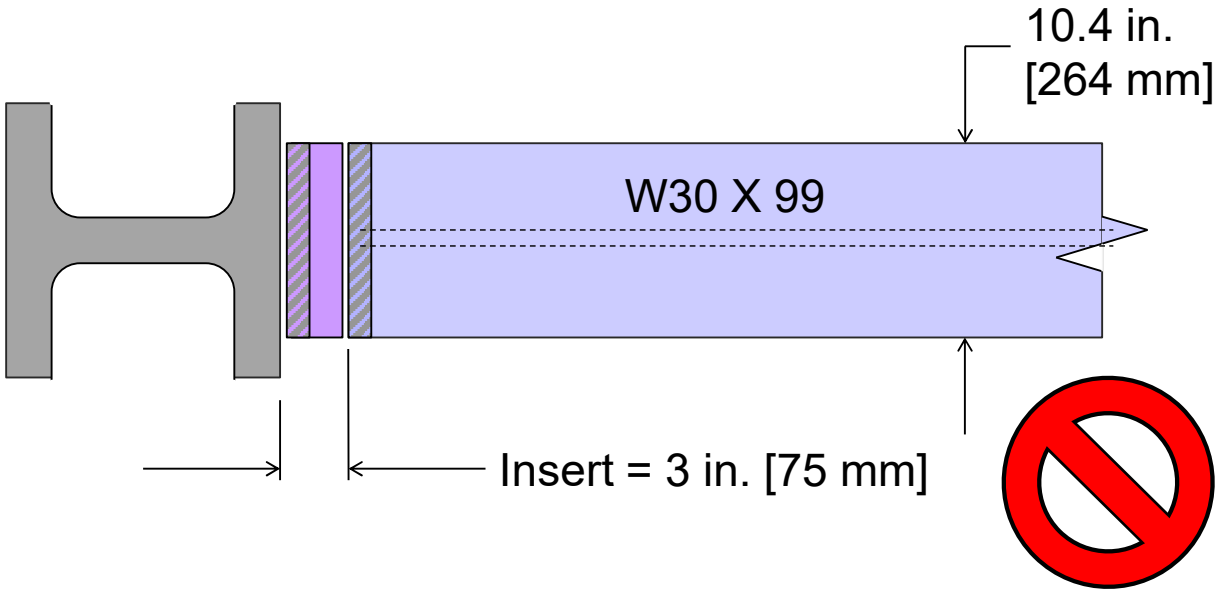

262

Chapter 15: Problems and Fixes

15.5 Fixing Members That Are Cut Short

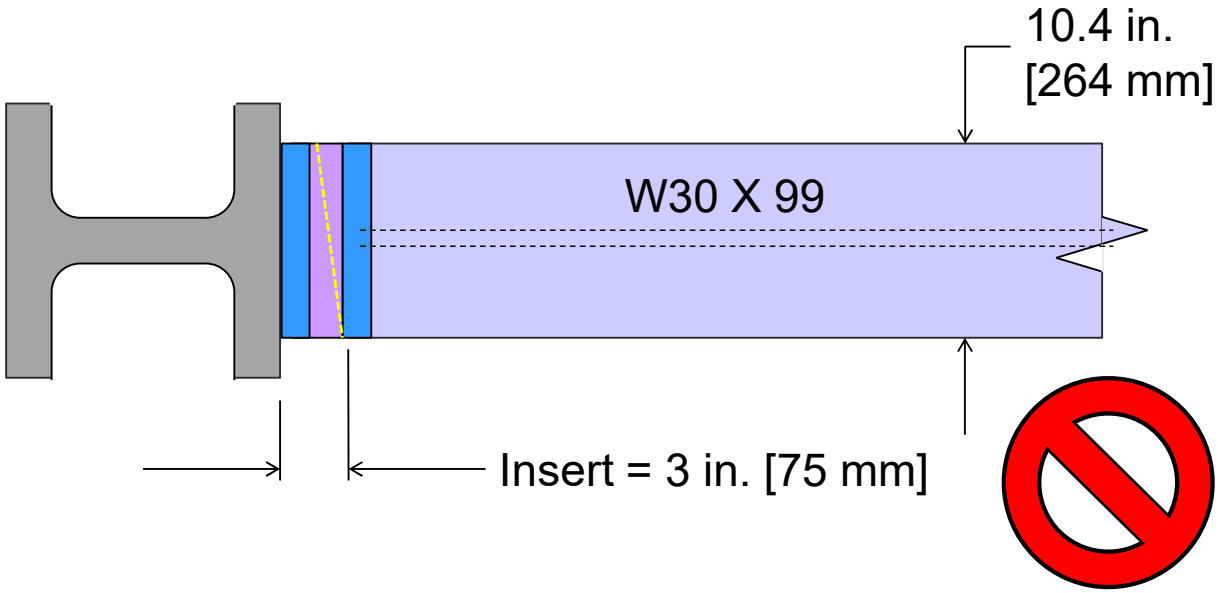

263

Chapter 15: Problems and Fixes

15.5 Fixing Members That Are Cut Short

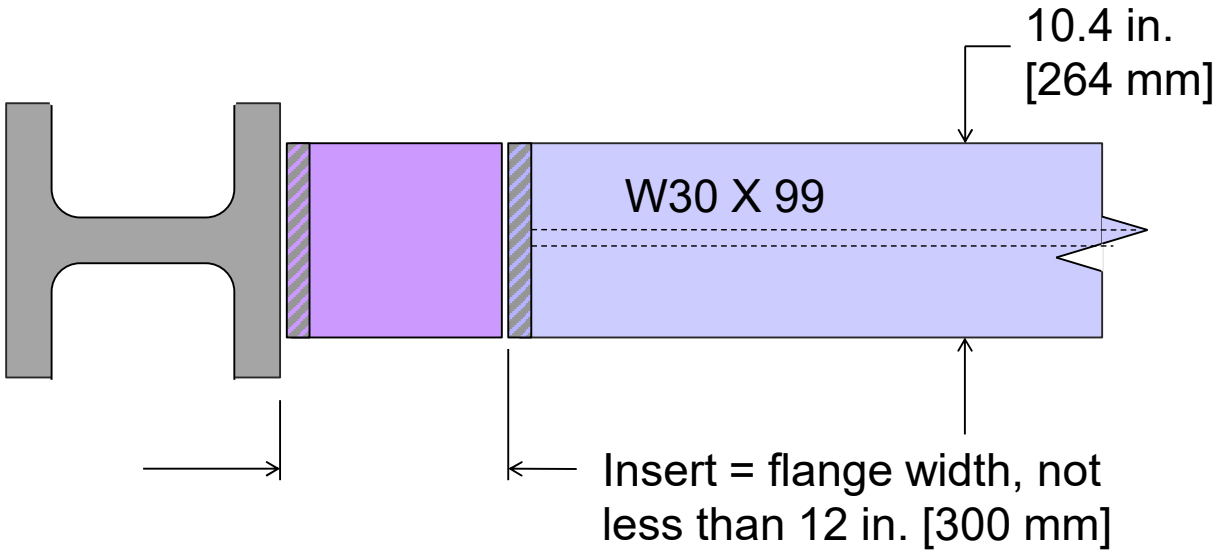

264

Chapter 15: Problems and Fixes

15.5 Fixing Members That Are Cut Short

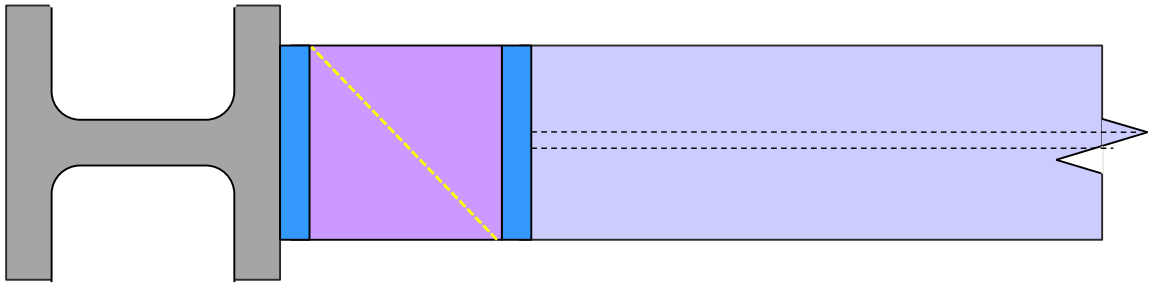

The additional material between the two parallel welds accommodates weld shrinkage strains.

265

How to Achieve Controlled Inelastic Deformations

- Select a ductile material
- Avoid conditions that prompt brittle fracture

  (triaxial stress, constraint, notches, low temperatures, high strain rates)
- Encourage shear stresses
- Applied shear stress > critical shear strength
- Ensure enough material is present to create meaningful displacements
- Ensure movement is in a meaningful direction

266

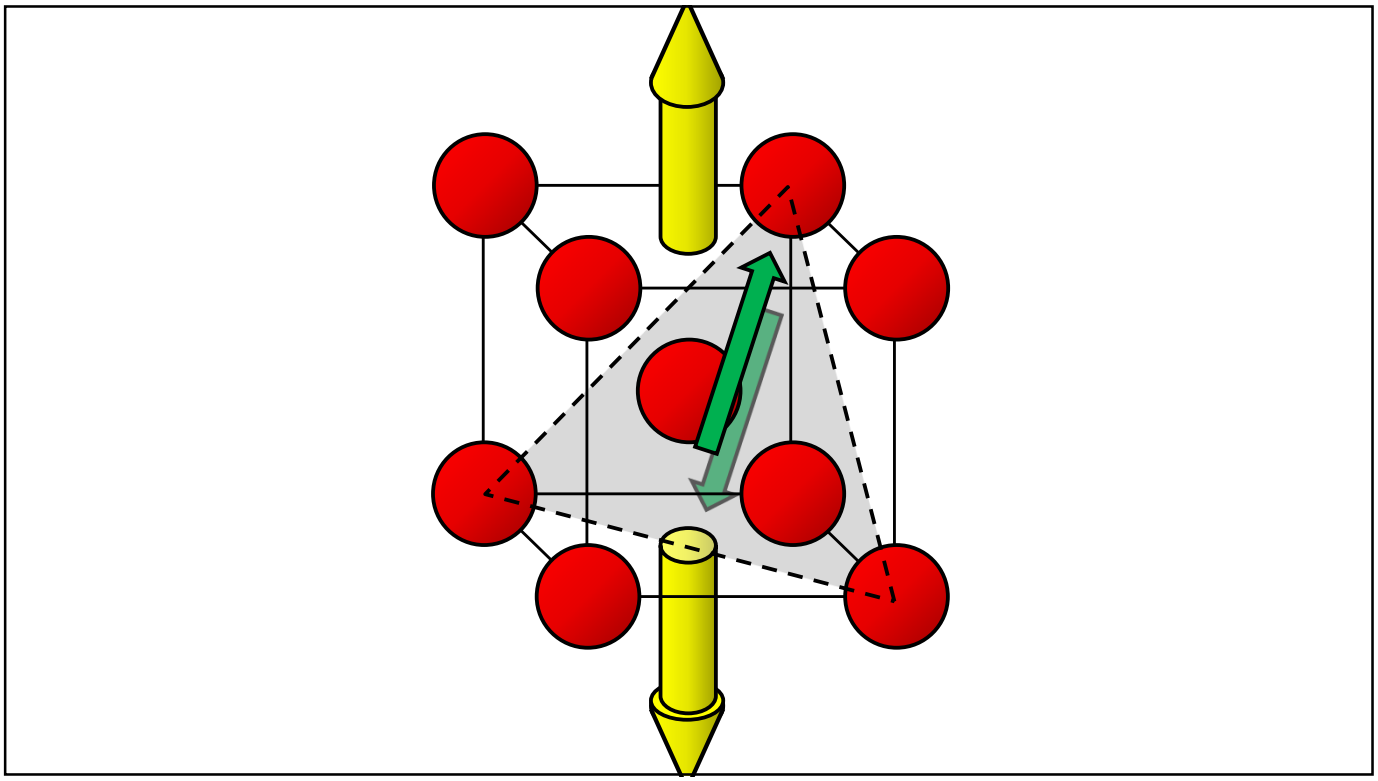

267

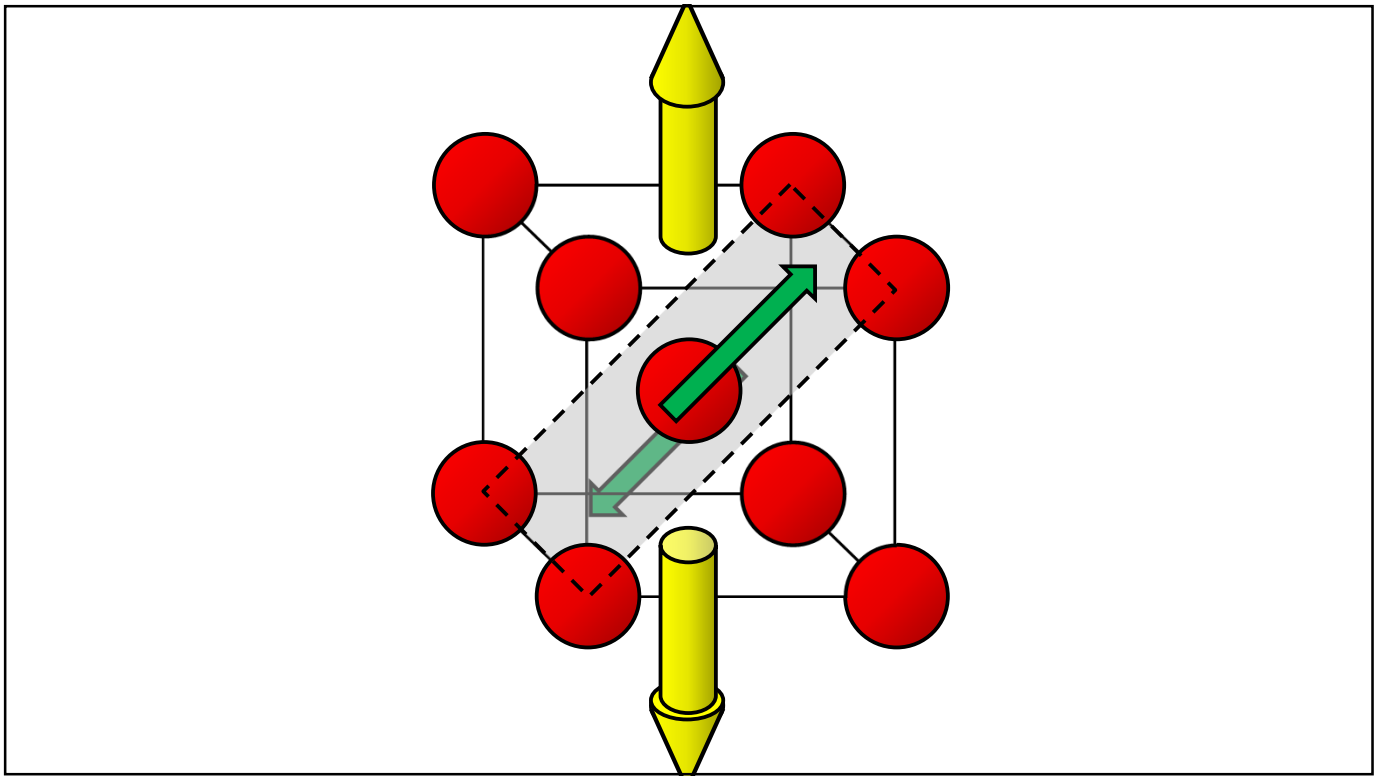

268

ANSI/AISC 358-16
An American National Standard

Prequalified Connections for Special and Intermediate Steel Moment Frames for Seismic Applications


ANSI/AISC 358-16
An American National Standard

Prequalified Connections for Special and Intermediate Steel Moment Frames for Seismic Applications

May 12, 2016

Supersedes ANSI/AISC 358-10, ANSI/AISC 358s1-11, ANSI/AISC 358s2-14 and all previous versions

Approved by the Connection Prequalification Review Panel

AMERICAN INSTITUTE OF STEEL CONSTRUCTION
130 East Randolph Street, Suite 2000, Chicago, Illinois 60601
www.aisc.org

269

The Pre-Northridge Moment Connection

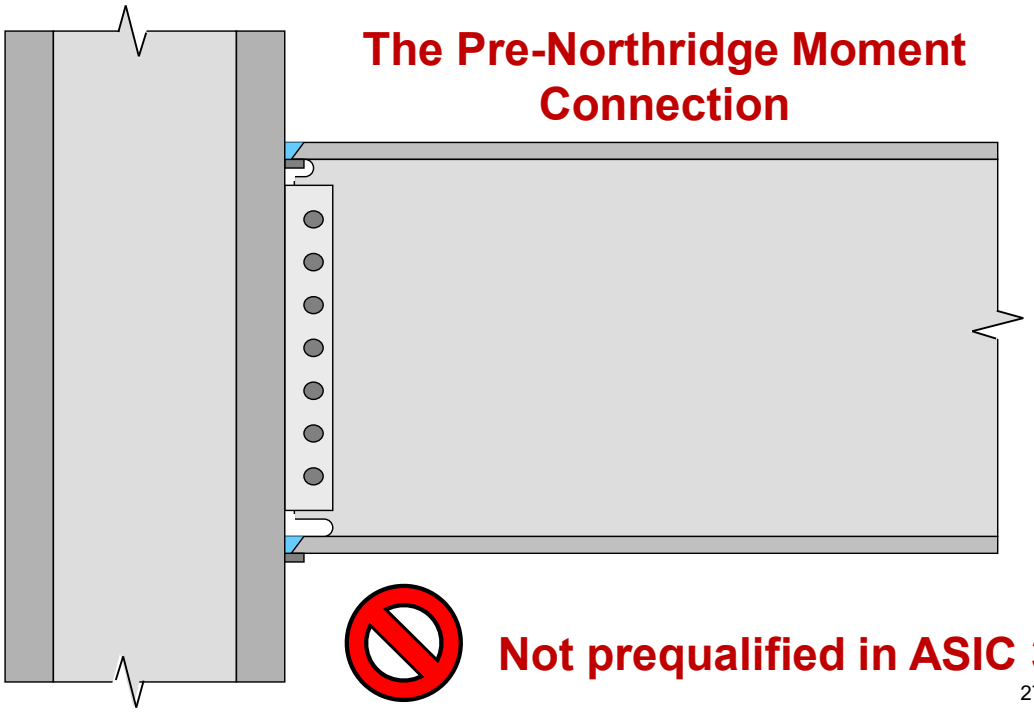

Not prequalified in ASIC 358

270

270

AISC 358-16 Prequalified Connections



Bolted End Plate Moment Connection

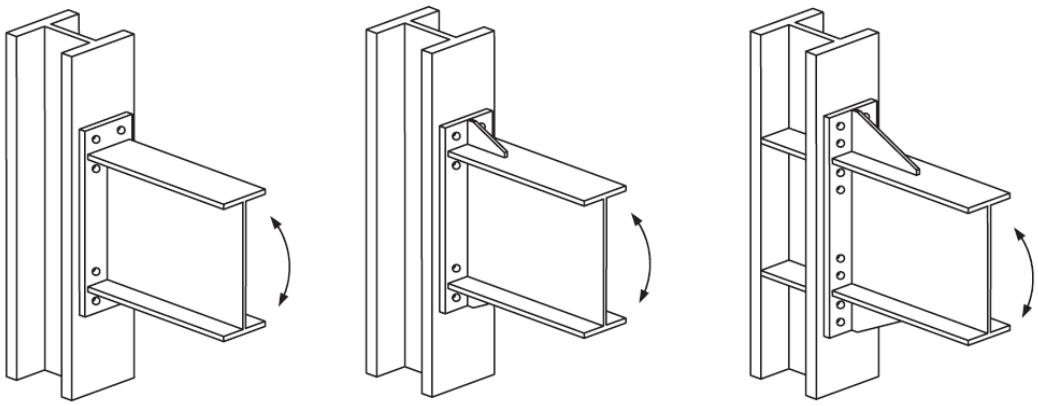

271

AISC 358-16 Prequalified Connections



Reduced Beam Section (RBS) Moment

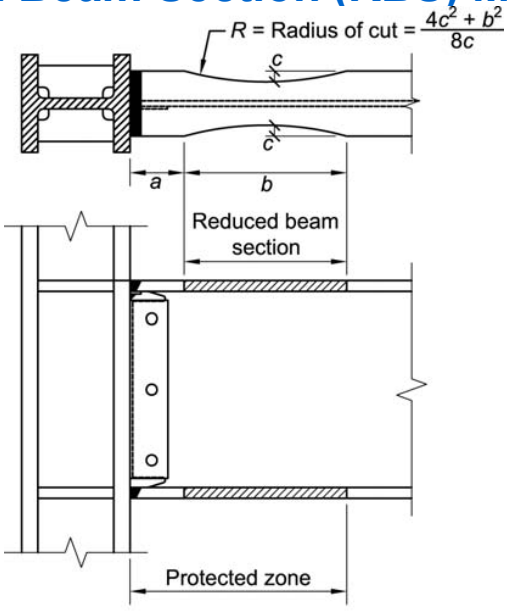

272

AISC 358-16 Prequalified Connections



Bolted Unstiffened and Stiffened Extended End-Plate moment connections (BUUEP, BSEEP)

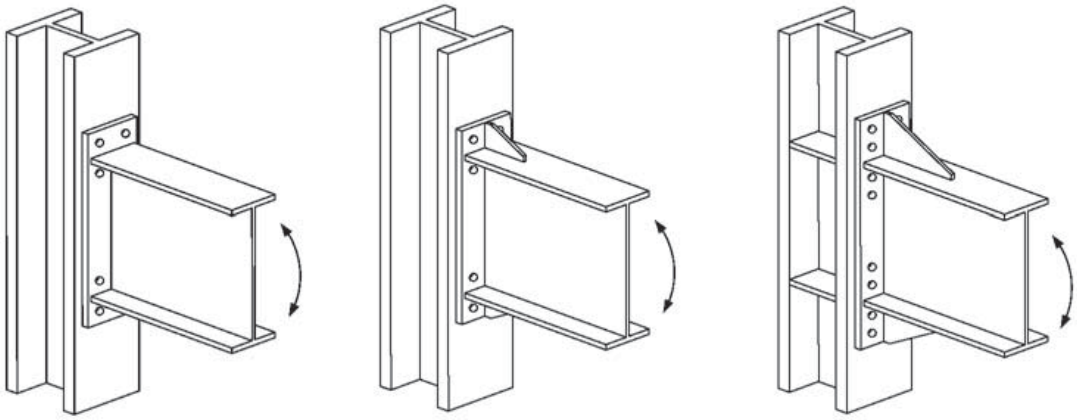

273

AISC 358-16 Prequalified Connections



Bolted Flange Plate (BFP) Moment

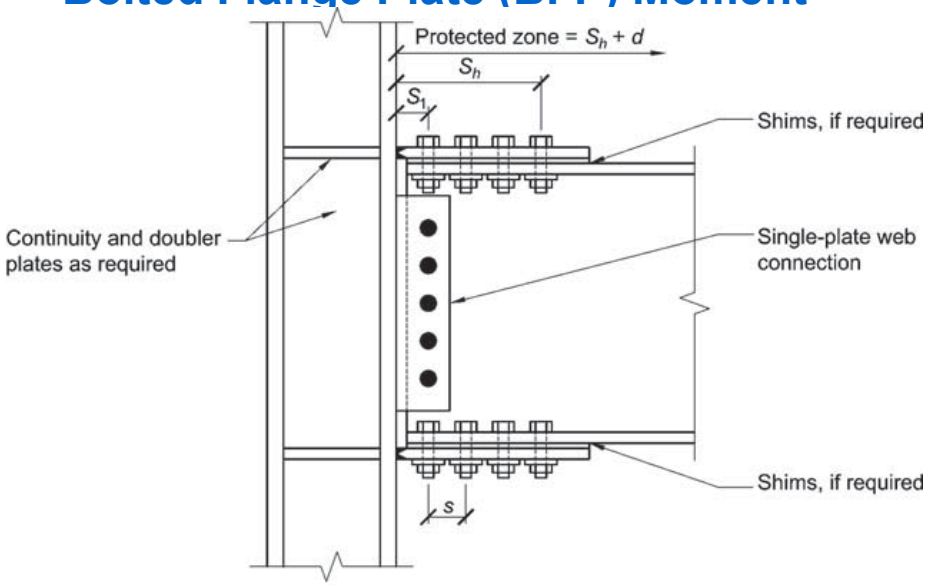

274

AISC 358-16 Prequalified Connections



Welded Unreinforced Flange-Welded Web (WUF-W) Moment Connection

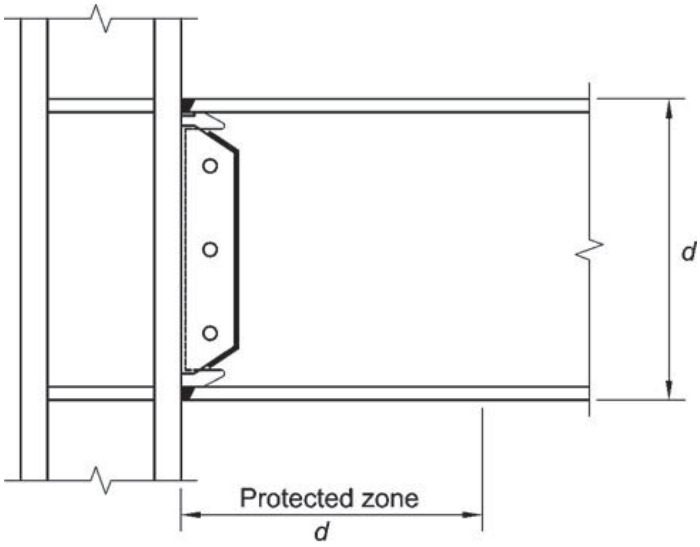

275

AISC 358-16 Prequalified Connections



Kaiser Bolted Bracket (KBB) Moment Connection

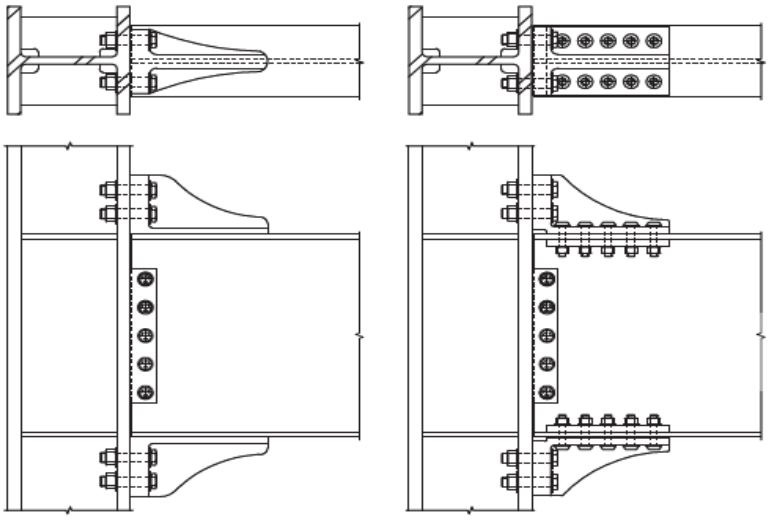

276

AISC 358-16 Prequalified Connections



CONXTECH ® CONXL™ Moment Connection

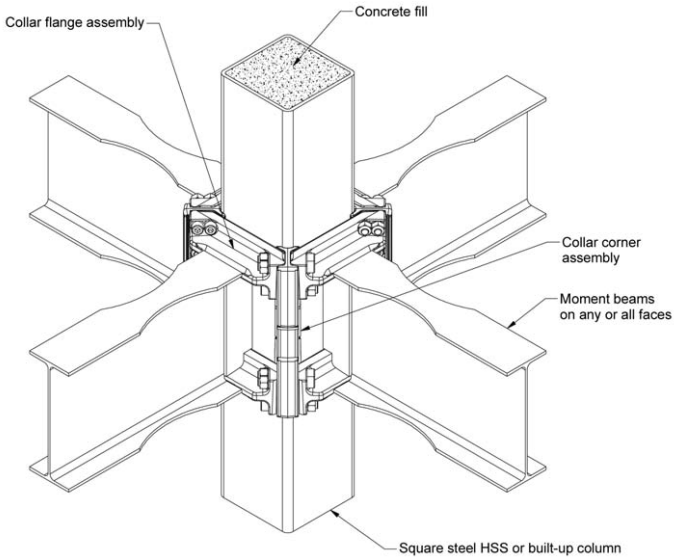

277

277

AISC 358-16 Prequalified Connections



SidePlate® Moment Connection

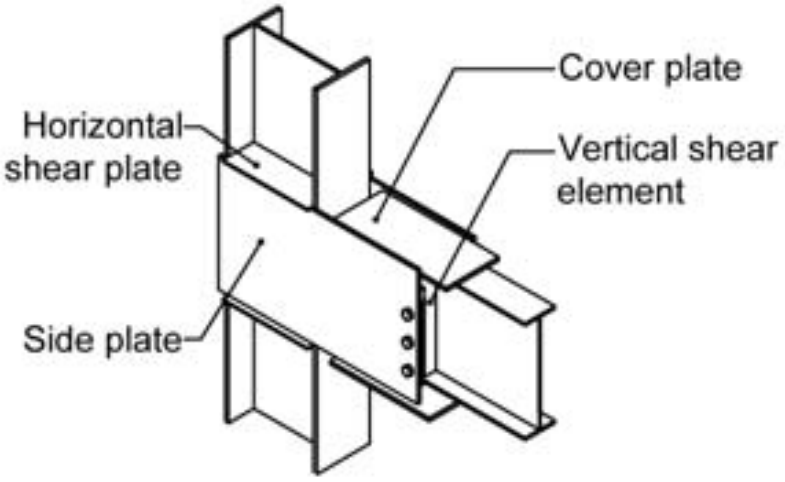

278

278

AISC 358-16 Prequalified Connections



SidePlate® Moment Connection

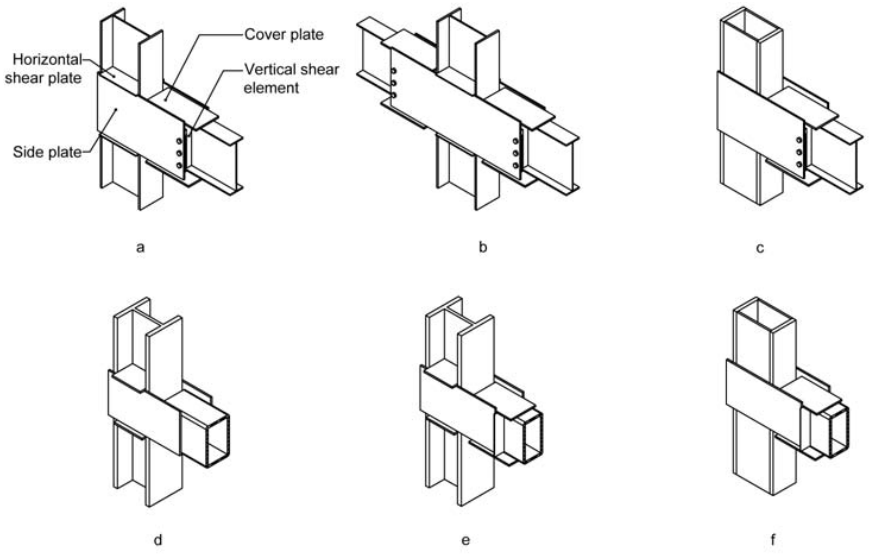

279

279

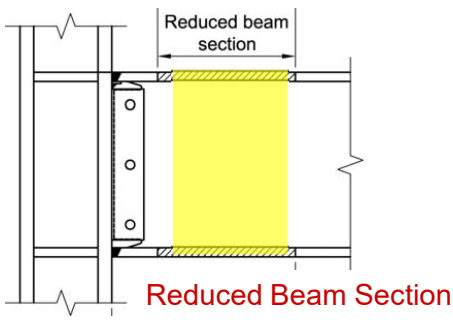

Reduced Beam Section

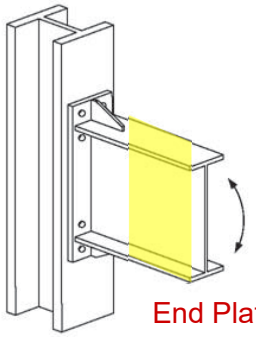

End Plate

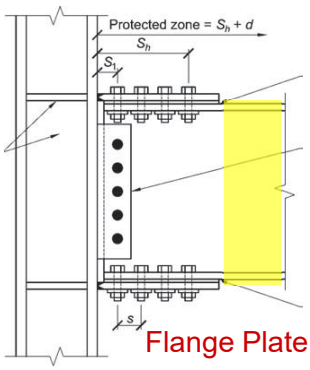

Flange Plate

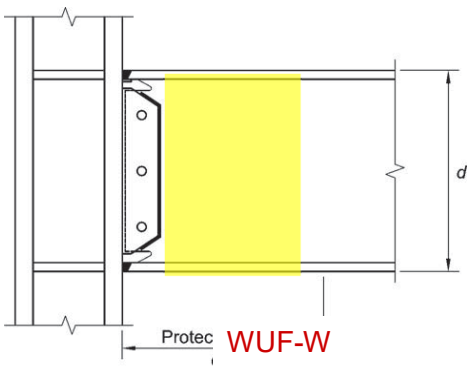

WUF-W

280

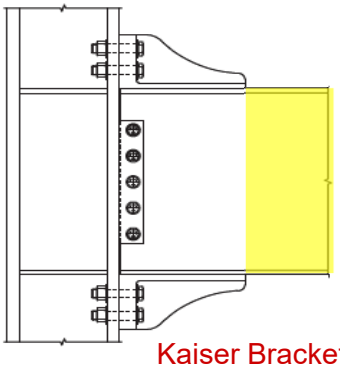

Kaiser Bracket

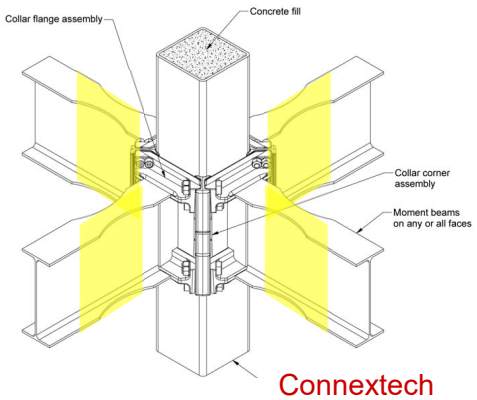

Connextech

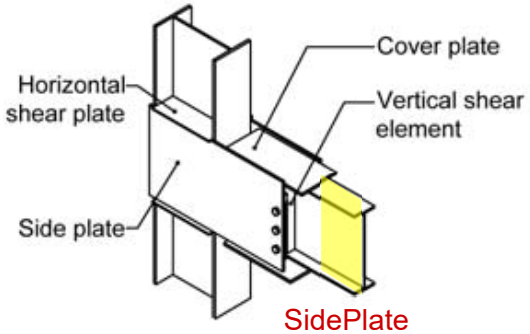

SidePlate

281

281

Ductility: Another View

Outline

- Introduction
- A Wrong View
- A Corrected View
- The View of Physics
- Application of the Correct View

282


STRUCTURAL ENGINEERS ASSOCIATION OF UTAH
10th Annual SEAU Education Conference
Ductility: Another View
Duane K. Miller, P.E., Sc.D
The Lincoln Electric Company

283